HIKVISION

DS-2DY9C460LXG-LWY/14
PTZ Camera

DarkFighter 2.0

- 1/1.2" progressive scan CMOS for PTZ channel
- Up to 2560 × 1440 resolution
- Captures a large area and great details at the same time
- 60× optical zoom, 16×digital zoom
- Excellent low-light performance via DarkFighter 2.0 technology
- Clear imaging against strong back light due to 150 dB AWDR technology
- Built-in gyroscope to ensure stable image output
- Support VR Panorama: VR-Assisted Live View significantly simplifies PTZ operations by generating a 360° panorama as a virtual reality map.
- Smart Pan-Tilt Correction
- Support up to 1000 m IR distance

▪ Specification

Camera	
Image Sensor	[Bullet channel] 1/1.8" Progressive Scan CMOS, [PTZ channel] 1/1.2" Progressive Scan CMOS
Max. Resolution	[Panoramic channel] 2560 × 1440, [PTZ channel] 2560 × 1440
Shutter Speed	1/1 ~ 1/30,000 s
Min. Illumination	[Bullet channel] Color: 0.0005 Lux @ (F1.0, AGC ON), [PTZ channel] Color: 0.0005 Lux @ (F1.6, AGC ON), B/W: 0.0001 Lux @ (F1.6, AGC ON), 0 lux with IR
Day & Night	[Bullet channel] no, [PTZ channel] IR cut filter
Zoom	60 × optical,16 × digital
Lens	
Focus	Auto,semi-auto,manual
Aperture	[Bullet channel] F1.0, [PTZ channel] F1.6
Focal Length	[panoramic channel]: 6 mm [PTZ channel]: 6 to 360 mm: 60× optical
FOV	[Panoramic channel] horizontal field of view: 55.2°, vertical field of view: 29.3°, diagonal field of view: 64.8° [PTZ channel] horizontal field of view: 61.1° to 1.4°, vertical field of view: 35.9° to 0.8°, diagonal field of view: 68.5° to 1.6° (W-T)
Illuminator	
Supplement Light Type	IR Laser (default: off)
Supplement Light Range	IR laser distance: up to 1000 m
Smart Supplement Light	Yes
PTZ	
Movement Range (Tilt)	-90° to 90°
Pan Speed	Pan speed: configurable from 0.1° to 100°/s, preset speed: 100°/s,Pan speed: configurable up to °/s, preset speed: °/s
Tilt Speed	Tilt speed: configurable from 0.1° to 50°/s, preset speed 50°/s
3D Positioning	Yes
Scheduled Task	Preset,pattern scan,patrol scan,auto scan,tilt scan,random scan,frame scan,panorama scan,dome reboot,dome adjust,aux output
Movement Range (Pan)	360°
Proportional Zoom	[panoramic channel]: no; [PTZ channel]: yes
Presets	300
Patrol Scan	8 patrols
Pattern Scan	4 pattern scans
Power-off Memory	[panoramic channel]: no; [PTZ channel]: yes
Park Action	Preset/Pattern Scan/Patrol Scan/Auto Scan/Tilt Scan/Random Scan/Frame Scan/Panorama Scan
Preset Freezing	[panoramic channel]: no; [PTZ channel]: yes
Video	
Video Compression	Main stream: H.265+/H.265/H.264+/H.264, Sub-stream: H.265/H.264/MJPEG, Third stream: H.265/H.264/MJPEG
Scalable Video Coding (SVC)	H.264 and H.265 encoding

Region of Interest (ROI)	8 fixed regions for each stream
Main Stream	[Panoramic channel] 50 Hz: 25 fps (2560 × 1440, 1920 × 1080, 1280 × 960, 1280 × 720) 60 Hz: 30 fps (2560 × 1440, 1920 × 1080, 1280 × 960, 1280 × 720) [PTZ channel] 50 Hz: 25 fps (2560 × 1440, 1920 × 1080, 1280 × 960, 1280 × 720) 60 Hz: 30 fps (2560 × 1440, 1920 × 1080, 1280 × 960, 1280 × 720)
Sub-Stream	[panoramic channel] 50Hz: 25fps (704 × 576, 640 × 480, 352 × 288) 60Hz: 30fps (704 × 480, 640 × 480, 352 × 240) [PTZ channel] 50Hz: 25fps (704 × 576, 640 × 480, 352 × 288) 60Hz: 30fps (704 × 480, 640 × 480, 352 × 240)
Third Stream	[panoramic channel] 50 Hz: 25 fps (1920 × 1080, 1280 × 960, 1280 × 720, 704 × 576, 640 × 480, 352 × 288) 60 Hz: 30 fps (1920 × 1080, 1280 × 960, 1280 × 720,704 × 480, 640 × 480, 352 × 240) [PTZ channel] 50 Hz: 25 fps (1920 × 1080,1280 × 960,1280 × 720,704 × 576,640 × 480, 352 × 288) 60 Hz: 30 fps (1920 × 1080,1280 × 960,1280 × 720,704 × 480,640 × 480, 352 × 240)
Audio	
Audio Compression	G.711,G.722.1,G.726,MP2L2,PCM,MP3,AAC-LC
Audio Bit Rate	64 Kbps (G.711),16 Kbps (G.722.1),16 Kbps (G.726),32 to 192 Kbps (MP2L2),16 to 64Kbps (AAC-LC),8 to 320 Kbps (MP3)
Audio Sampling Rate	MP2L2: 16 kHz, 32 kHz, 48 kHz,AAC-LC: 16 kHz, 32 kHz, 48 kHz,PCM: 8 kHz, 16 kHz, 32 kHz, 48 kHz,MP3: 8 kHz, 16 kHz, 32 kHz, 48 kHz
Network	
API	ONVIF (Profile S, Profile G, Profile T, Profile M),ISAPI,SDK,ISUP
Security	Password protection,complicated password,host authentication (MAC address),HTTPS encryption,802.1X authentication (EAP-TLS, EAP-LEAP, EAP-MD5),IP address filter
Web Browser	IE11, Chrome 80+, Firefox 80+, Safari 13+, Edge 89+
Network Storage	NAS (NFS, SMB/ CIFS) ,null
Protocols	HTTP,Qos,FTP,SMTP,UPnP,SNMP,DNS,DDNS,NTP,RTSP,RTCP,RTP,TCP/IP,UDP,IGMP,ICMP,DHCP,PPPoE,Bonjour,WebSocket,WebSockets,SRTP,null
User/Host	Up to 32 users. 3 levels: Administrator, Operator and User
Client	iVMS-4200
Image	
Wide Dynamic Range (WDR)	150 dB
Image Stabilization	[Panoramic channel]: EIS,[PTZ channel]: OIS
Image Enhancement	BLC,HLC,3D DNR
Regional Focus	[Panoramic channel] No, [PTZ channel] Yes
Defog	Optical defog
Regional Exposure	Yes
Image Settings	Saturation, brightness, contrast, sharpness, gain, and white balance adjustable by client software or web browser
Image Parameters Switch	Yes

Privacy Mask	[Panoramic channel] No, [PTZ channel] 24 programmable polygon privacy masks; mask color or mosaic configurable
SNR	≥ 52 dB
Interface	
Communication Interface	RJ45, self-adaptive 10M/100M Ethernet port
On-board Storage	Built-in memory card slot, support microSD/microSDHC/microSDXC card, up to 512 GB
Alarm	7 input(s), 2 output(s)
Audio	1 input (line in), max. input amplitude: 2-2.4 vpp, input impedance: 1 KΩ ± 10%, 1 output (line out), line level, output impedance: 600 Ω
Event	
Basic Event	Motion detection,video tampering alarm,exception (network disconnected, IP address conflict, illegal login, HDD full, HDD error),vandal-proof alam,audio exception detection,alarm input and output
Smart Event	Line crossing detection,intrusion detection,region entrance detection,region exiting detection,object removal detection,unattended baggage detection,support alarm triggering by specified target types (human and vehicle)
Deep Learning Function	
Multi-Target-Type Detection	Supports simultaneous detection and capture of human body, face and vehicle
Face Capture	Detects up to 30 faces simultaneously
General	
Power	36 VDC ± 25%, max. 92 W
Operating Condition	Temperature: -40°C to 70°C (-40°F to 158°F), Humidity: ≤ 95%
Wiper	Yes
Language	33 languages: English, Russian, Estonian, Bulgarian, Hungarian, Greek, German, Italian, Czech, Slovak, French, Polish, Dutch, Portuguese, Spanish, Romanian, Danish, Swedish, Norwegian, Finnish, Croatian, Slovenian, Serbian, Turkish, Korean, Traditional Chinese, Thai, Vietnamese, Japanese, Latvian, Lithuanian, Portuguese (Brazil), Ukrainian
General Function	Anti-flicker,heartbeat,mirror,flash log,password reset via e-mail,password protection,watermark
Dimensions	491 mm × 338.1 mm × 354.3 mm (19.34" × 13.32" × 13.96")
Weight	Approx. 23.1 kg (50.82 lb.)
Approval	
EMC	CE-EMC (EN 55032: 2015, EN 61000-3-2: 2019, EN 61000-3-3: 2013 + A1: 2019, EN 50130-4: 2011 + A1: 2014),RCM (AS/NZS CISPR 32: 2015),IC (ICES-003: Issue 7)
Safety	CB (IEC 62368-1: 2014 + A11),CE-LVD (EN 62368-1: 2014/A11: 2017),LOA (IEC/EN 60950-1)
Environment	CE-RoHS (2011/65/EU),WEEE (2012/19/EU),Reach (Regulation (EC) No 1907/2006)
Protection	IP67 (IEC 60529-2013),TVS 6000 V lightning protection, surge protection and voltage transient protection,IK10 (Excepts Lens) (IEC 62262:2002)
Anti-Corrosion Protection	NEMA 4X (NEMA 250-2018)

▪ DORI

The DORI (detect, observe, recognize, identify) distance gives the general idea of the camera ability to distinguish persons or objects within its field of view. It is calculated based on the camera sensor specification and the criteria given by EN 62676-4: 2015.

DORI	Detect	Observe	Recognize	Identify
Definition	25 px/m	63 px/m	125 px/m	250 px/m

Distance (Tele)	3310.3	1313.6	662.1	331

▪ Available Model

DS-2DY9C460LXG-LWY/14(F2)

▪Dimension

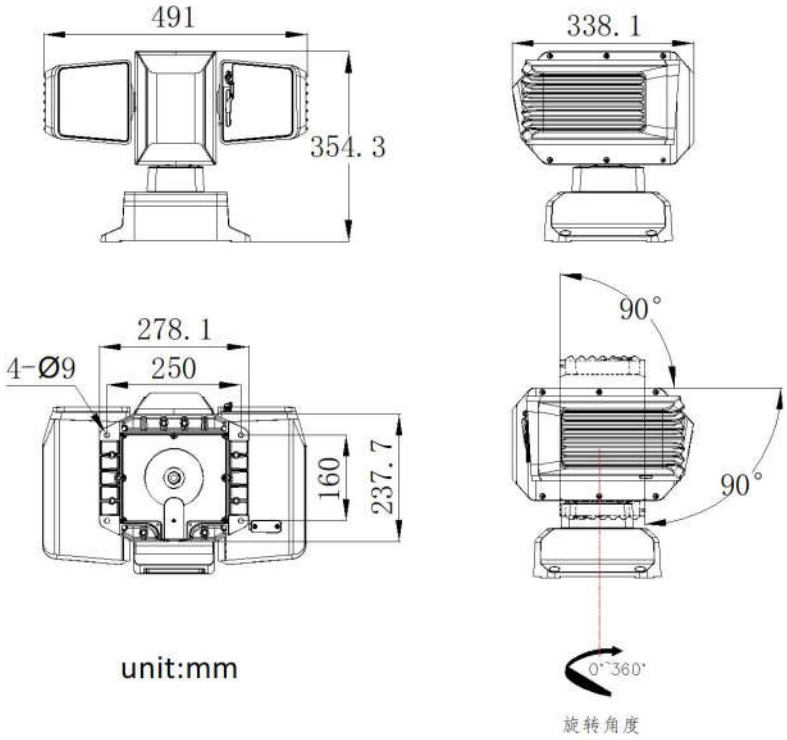

▪ Accessory

▪Optional

DS-1693ZJ(B)

See Far, Go Further

www.hikvision.com
support@hikvision.com

© Hangzhou Hikvision Digital Technology Co., Ltd. Unless otherwise agreed, Hikvision makes no warranties, express or implied. We reserve the right to introduce modifications without notice.