Video Intercom Villa Door Station

User Manual

Legal Information

About this Document

- This Document includes instructions for using and managing the Product. Pictures, charts, images and all other information hereinafter are for description and explanation only.
- The information contained in the Document is subject to change, without notice, due to firmware updates or other reasons. Please find the latest version of the Document at the Hikvision website (***https://www.hikvision.com***). Unless otherwise agreed, Hangzhou Hikvision Digital Technology Co., Ltd. or its affiliates (hereinafter referred to as "Hikvision") makes no warranties, express or implied.
- Please use the Document with the guidance and assistance of professionals trained in supporting the Product.

About this Product

This product can only enjoy the after-sales service support in the country or region where the purchase is made.

Acknowledgment of Intellectual Property Rights

- Hikvision owns the copyrights and/or patents related to the technology embodied in the Products described in this Document, which may include licenses obtained from third parties.
- Any part of the Document, including text, pictures, graphics, etc., belongs to Hikvision. No part of this Document may be excerpted, copied, translated, or modified in whole or in part by any means without written permission.
- HIKVISION and other Hikvision's trademarks and logos are the properties of Hikvision in various jurisdictions.
- Other trademarks and logos mentioned are the properties of their respective owners.

LEGAL DISCLAIMER

- TO THE MAXIMUM EXTENT PERMITTED BY APPLICABLE LAW, THIS DOCUMENT AND THE PRODUCT DESCRIBED, WITH ITS HARDWARE, SOFTWARE AND FIRMWARE, ARE PROVIDED "AS IS" AND "WITH ALL FAULTS AND ERRORS". HIKVISION MAKES NO WARRANTIES, EXPRESS OR IMPLIED, INCLUDING WITHOUT LIMITATION, MERCHANTABILITY, SATISFACTORY QUALITY, OR FITNESS FOR A PARTICULAR PURPOSE. THE USE OF THE PRODUCT BY YOU IS AT YOUR OWN RISK. IN NO EVENT WILL HIKVISION BE LIABLE TO YOU FOR ANY SPECIAL, CONSEQUENTIAL, INCIDENTAL, OR INDIRECT DAMAGES, INCLUDING, AMONG OTHERS, DAMAGES FOR LOSS OF BUSINESS PROFITS, BUSINESS INTERRUPTION, OR LOSS OF DATA, CORRUPTION OF SYSTEMS, OR LOSS OF DOCUMENTATION, WHETHER BASED ON BREACH OF CONTRACT, TORT (INCLUDING NEGLIGENCE), PRODUCT LIABILITY, OR OTHERWISE, IN CONNECTION WITH THE USE OF THE

PRODUCT, EVEN IF HIKVISION HAS BEEN ADVISED OF THE POSSIBILITY OF SUCH DAMAGES OR LOSS.

- YOU ACKNOWLEDGE THAT THE NATURE OF THE INTERNET PROVIDES FOR INHERENT SECURITY RISKS, AND HIKVISION SHALL NOT TAKE ANY RESPONSIBILITIES FOR ABNORMAL OPERATION, PRIVACY LEAKAGE OR OTHER DAMAGES RESULTING FROM CYBER-ATTACK, HACKER ATTACK, VIRUS INFECTION, OR OTHER INTERNET SECURITY RISKS; HOWEVER, HIKVISION WILL PROVIDE TIMELY TECHNICAL SUPPORT IF REQUIRED.
- YOU AGREE TO USE THIS PRODUCT IN COMPLIANCE WITH ALL APPLICABLE LAWS, AND YOU ARE SOLELY RESPONSIBLE FOR ENSURING THAT YOUR USE CONFORMS TO THE APPLICABLE LAW. ESPECIALLY, YOU ARE RESPONSIBLE, FOR USING THIS PRODUCT IN A MANNER THAT DOES NOT INFRINGE ON THE RIGHTS OF THIRD PARTIES, INCLUDING WITHOUT LIMITATION, RIGHTS OF PUBLICITY, INTELLECTUAL PROPERTY RIGHTS, OR DATA PROTECTION AND OTHER PRIVACY RIGHTS. YOU SHALL NOT USE THIS PRODUCT FOR ANY PROHIBITED END-USES, INCLUDING THE DEVELOPMENT OR PRODUCTION OF WEAPONS OF MASS DESTRUCTION, THE DEVELOPMENT OR PRODUCTION OF CHEMICAL OR BIOLOGICAL WEAPONS, ANY ACTIVITIES IN THE CONTEXT RELATED TO ANY NUCLEAR EXPLOSIVE OR UNSAFE NUCLEAR FUEL-CYCLE, OR IN SUPPORT OF HUMAN RIGHTS ABUSES.
- IN THE EVENT OF ANY CONFLICTS BETWEEN THIS DOCUMENT AND THE APPLICABLE LAW, THE LATTER PREVAILS.

© Hangzhou Hikvision Digital Technology Co., Ltd. All rights reserved.

Symbol Conventions

The symbols that may be found in this document are defined as follows.

Symbol	Description
Danger	Indicates a hazardous situation which, if not avoided, will or could result in death or serious injury.
Caution	Indicates a potentially hazardous situation which, if not avoided, could result in equipment damage, data loss, performance degradation, or unexpected results.
Note	Provides additional information to emphasize or supplement important points of the main text.

Safety Instruction

Warning

- All the electronic operation should be strictly compliance with the electrical safety regulations, fire prevention regulations and other related regulations in your local region.
- Please use the power adapter, which is provided by normal company. The power consumption cannot be less than the required value.
- Do not connect several devices to one power adapter as adapter overload may cause over-heat or fire hazard.
- Please make sure that the power has been disconnected before you wire, install or dismantle the device.
- When the product is installed on wall or ceiling, the device shall be firmly fixed.
- If smoke, odors or noise rise from the device, turn off the power at once and unplug the power cable, and then please contact the service center.
- If the product does not work properly, please contact your dealer or the nearest service center. Never attempt to disassemble the device yourself. (We shall not assume any responsibility for problems caused by unauthorized repair or maintenance.)

Caution

- Do not drop the device or subject it to physical shock, and do not expose it to high electromagnetism radiation. Avoid the equipment installation on vibrations surface or places subject to shock (ignorance can cause equipment damage).
- Do not place the device in extremely hot (refer to the specification of the device for the detailed operating temperature), cold, dusty or damp locations, and do not expose it to high electromagnetic radiation.
- The device cover for indoor use shall be kept from rain and moisture.
- Exposing the equipment to direct sun light, low ventilation or heat source such as heater or radiator is forbidden (ignorance can cause fire danger).
- Do not aim the device at the sun or extra bright places. A blooming or smear may occur otherwise (which is not a malfunction however), and affecting the endurance of sensor at the same time.
- Please use the provided glove when open up the device cover, avoid direct contact with the device cover, because the acidic sweat of the fingers may erode the surface coating of the device cover.
- Please use a soft and dry cloth when clean inside and outside surfaces of the device cover, do not use alkaline detergents.
- Please keep all wrappers after unpack them for future use. In case of any failure occurred, you need to return the device to the factory with the original wrapper. Transportation without the original wrapper may result in damage on the device and lead to additional costs.

- Improper use or replacement of the battery may result in hazard of explosion. Replace with the same or equivalent type only. Dispose of used batteries according to the instructions provided by the battery manufacturer.
- Input voltage should meet both the SELV and the Limited Power Source according to 60950-1 standard.
- The power supply must conform to LPS. The recommended adaptor models and manufacturers are shown as below. Use the attached adapter, and do not change the adaptor randomly.

Model	Manufacturer	Standard
ADS-24S-12 1224GPCN	SHENZHEN HONOR ELECTRONIC CO.,LTD	CEE
G0549-240-050	SHENZHEN GOSPELL DIGITAL TECHNOLOGY CO.,LTD	CEE
TS-A018-120015Ec	SHENZHEN TRANSIN TECHNOLOGIES CO., LTD	CEE

Regulatory Information

FCC Information

Please take attention that changes or modification not expressly approved by the party responsible for compliance could void the user's authority to operate the equipment.
FCC compliance: This equipment has been tested and found to comply with the limits for a Class B digital device, pursuant to part 15 of the FCC Rules. These limits are designed to provide reasonable protection against harmful interference in a residential installation. This equipment generates, uses and can radiate radio frequency energy and, if not installed and used in accordance with the instructions, may cause harmful interference to radio communications. However, there is no guarantee that interference will not occur in a particular installation. If this equipment does cause harmful interference to radio or television reception, which can be determined by turning the equipment off and on, the user is encouraged to try to correct the interference by one or more of the following measures:
—Reorient or relocate the receiving antenna.
—Increase the separation between the equipment and receiver.
—Connect the equipment into an outlet on a circuit different from that to which the receiver is connected.
—Consult the dealer or an experienced radio/TV technician for help
FCC Conditions
This device complies with part 15 of the FCC Rules. Operation is subject to the following two conditions:
1. This device may not cause harmful interference.
2. This device must accept any interference received, including interference that may cause undesired operation.

EU Conformity Statement

This product and - if applicable - the supplied accessories too are marked with "CE" and comply therefore with the applicable harmonized European standards listed under the EMC Directive 2014/30/EU, the RoHS Directive 2011/65/EU

2012/19/EU (WEEE directive): Products marked with this symbol cannot be disposed of as unsorted municipal waste in the European Union. For proper recycling, return this product to your local supplier upon the purchase of equivalent new equipment, or dispose of it at designated collection points. For more information see: www.recyclethis.info

2006/66/EC (battery directive): This product contains a battery that cannot be disposed of as unsorted municipal waste in the European Union. See the product documentation for specific battery information. The battery is marked with this symbol, which may include lettering to indicate cadmium (Cd), lead (Pb), or mercury (Hg). For proper recycling, return the battery to your supplier or to a designated collection point. For more information see:www.recyclethis.info

Industry Canada ICES-003 Compliance

This device meets the CAN ICES-3 (B)/NMB-3(B) standards requirements.
This device complies with Industry Canada licence-exempt RSS standard(s). Operation is subject to the following two conditions:

1. this device may not cause interference, and
2. this device must accept any interference, including interference that may cause undesired operation of the device.

Le présent appareil est conforme aux CNR d'Industrie Canada applicables aux appareils radioexempts de licence. L'exploitation est autorisée aux deux conditions suivantes :

1. l'appareil ne doit pas produire de brouillage, et
2. l'utilisateur de l'appareil doit accepter tout brouillage radioélectrique subi, même si le brouillage est susceptible d'en compromettre le fonctionnement.

Under Industry Canada regulations, this radio transmitter may only operate using an antenna of a type and maximum (or lesser) gain approved for the transmitter by Industry Canada. To reduce potential radio interference to other users, the antenna type and its gain should be so chosen that the equivalent isotropically radiated power (e.i.r.p.) is not more than that necessary for successful communication.
Conformément à la réglementation d'Industrie Canada, le présent émetteur radio peut fonctionner avec une antenne d'un type et d'un gain maximal (ou inférieur) approuvé pour l'émetteur par Industrie Canada. Dans le but de réduire les risques de brouillage radioélectrique à l'intention des autres utilisateurs, il faut choisir le type d'antenne et son gain de sorte que la puissance isotrope

rayonnée équivalente (p.i.r.e.) ne dépasse pas l'intensité nécessaire à l'établissement d'une communication satisfaisante.
This equipment should be installed and operated with a minimum distance 20cm between the radiator and your body.
Cet équipement doit être installé et utilisé à une distance minimale de 20 cm entre le radiateur et votre corps.

Contents

Chapter 1 Appearance 1

Chapter 2 Terminal and Wiring Description 3

2.1 Terminal Description 3

2.2 Wiring Description 4

2.2.1 Door Lock Wiring 4

2.2.2 Door Contact Wiring 5

2.2.3 Exit Button Wiring 6

2.2.4 Alarm Input Device Wiring 7

Chapter 3 Installation 8

3.1 Accessory Introduction 8

3.2 Surface Mounting without Protective Shield 9

3.3 Surface Mounting with Protective Shield 12

Chapter 4 Activation 16

4.1 Activate Device via Web 16

4.2 Activate Device via Client Software 16

4.3 Edit Network Parameters 17

Chapter 5 Remote Configuration via Web 18

5.1 Live View 18

5.2 User Management 18

5.3 Device Management 19

5.4 Parameters Settings 20

5.4.1 Local Parameters Settings 20

5.4.2 System Settings 22

5.4.3 Network Settings 24

5.4.4 Video & Audio Settings 29

5.4.5 Image Settings 32

5.4.6 Event Settings 35
5.4.7 Schedule Settings 39
5.4.8 Intercom Settings 40
5.4.9 Access Control Settings 43
Chapter 6 Configuration via Client Software 47
6.1 Device Management 47
6.1.1 Add Online Device 47
6.1.2 Add Device by IP Address 49
6.1.3 Add Device by IP Segment 49
6.2 Live View via Door Station 49
6.3 Organization Management 49
6.3.1 Add Organization 49
6.3.2 Modify and Delete Organization 50
6.4 Person Management 50
6.4.1 Add Person 50
6.4.2 Modify and Delete Person 51
6.4.3 Change Person to Other Organization 51
6.4.4 Import and Export Person Information 52
6.4.5 Get Person Information from Device 52
6.4.6 Issue Card in Batch 53
6.5 Video Intercom Settings 55
6.5.1 Receive Call from Door Station 56
6.5.2 Release Notice 56
6.5.3 Search Video Intercom Information 57
6.5.4 Upload Armed Information 59
Appendix A. Communication Matrix and Device Command 60

Chapter 1 Appearance

Front Panel and Rear Panel

Here takes DS-KV6113-WPE1 for example.

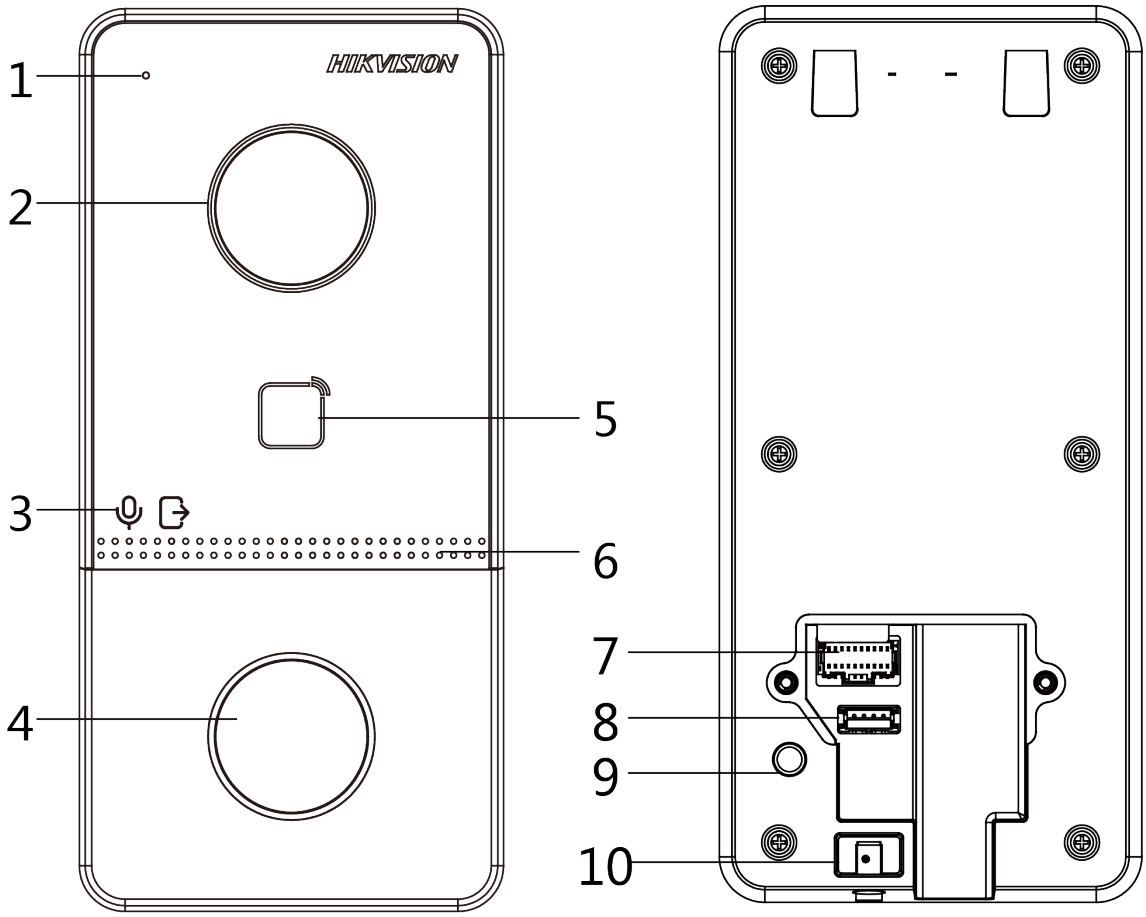

Figure 1-1 Front Panel and Rear Panel

Table 1-1 Description

No.	Description
1	Microphone
2	Camera
3	Indicator Unlock (Green)/ Call (Orange)/ Communicate (White)

No.	Description
4	Button
5	Card Reading Area
6	Loudspeaker
7	Terminals
8	Debugging Port
9	TAMPER
10	Set Screw

Bottom Panel

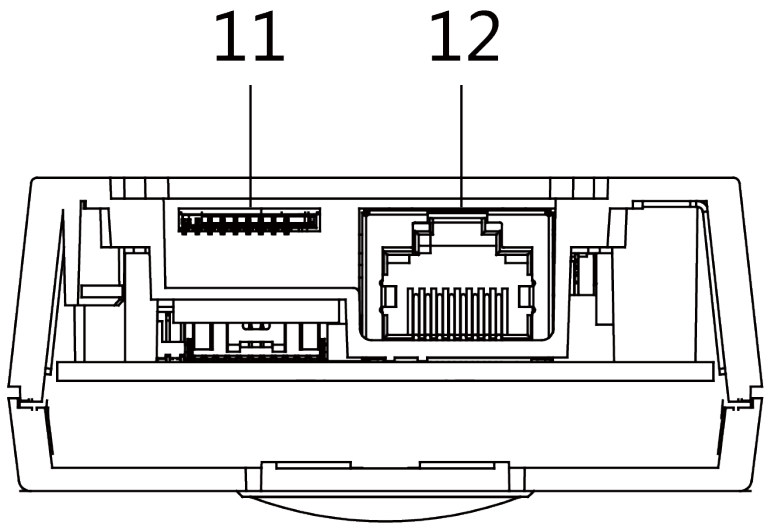

Figure 1-2 Bottom Panel

Table 1-2 Description

No.	Description
11	TF Card Slot (Reserved)
12	Network Interface

Chapter 2 Terminal and Wiring Description

2.1 Terminal Description

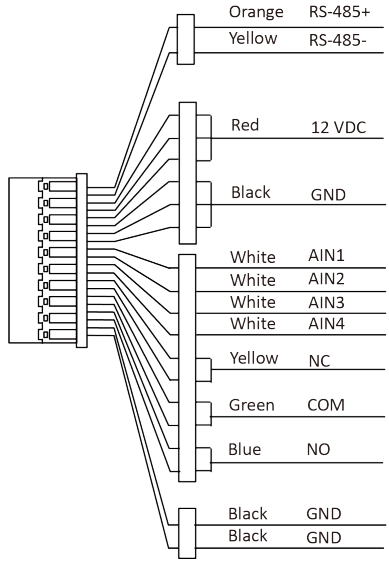

Figure 2-1 Terminal Description

Note

RS-485 terminal is not supported.

2.2 Wiring Description

2.2.1 Door Lock Wiring

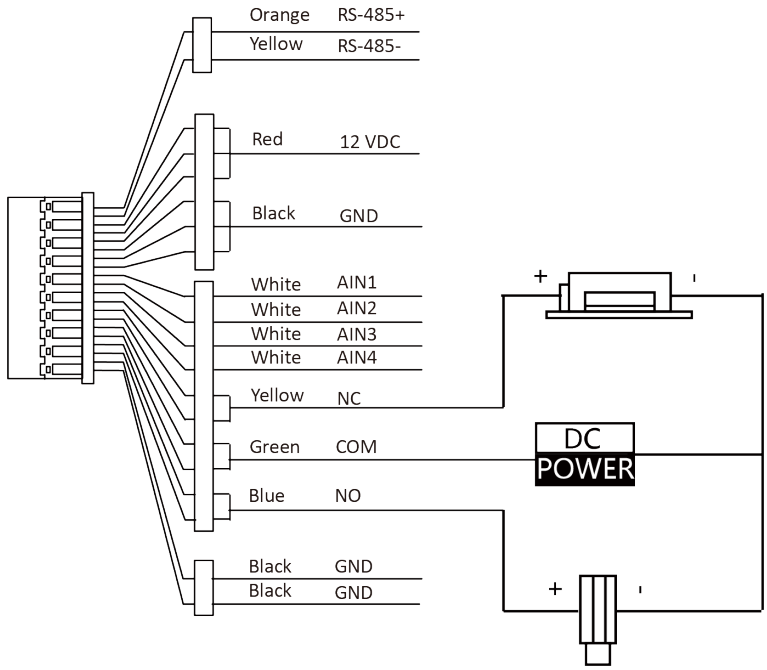

Figure 2-2 Door Lock Wiring

Note

Terminal NC/COM is set as default for accessing magnetic lock/electric bolt; terminal NO/COM is set as default for accessing electric strike.

2.2.2 Door Contact Wiring

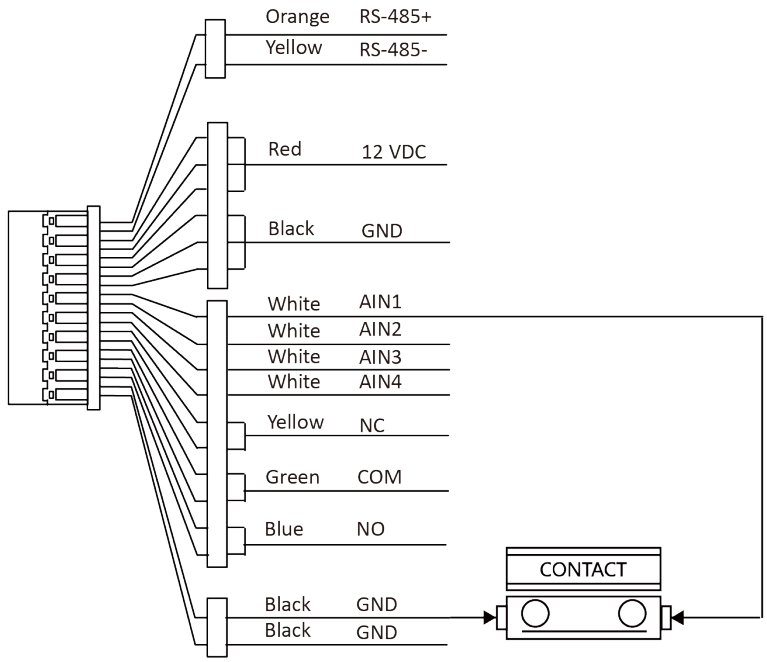

Figure 2-3 Door Contact Wiring

2.2.3 Exit Button Wiring

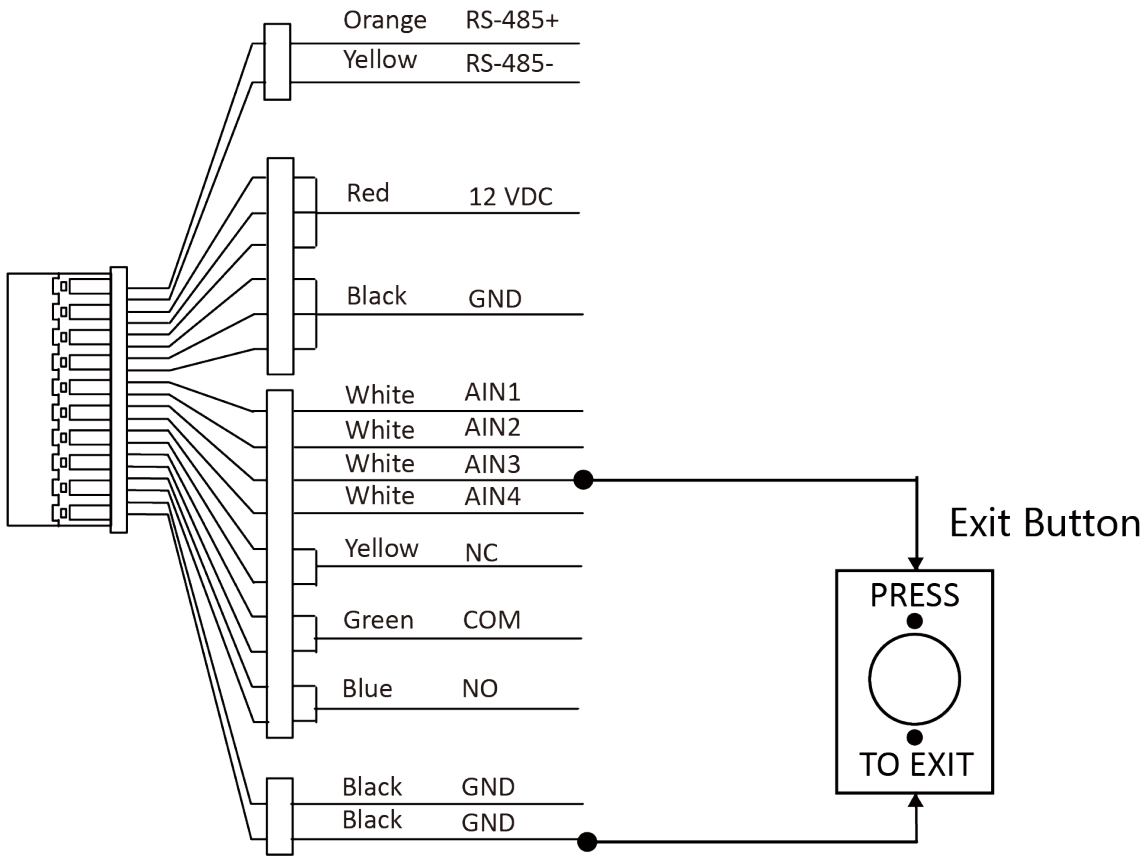

Figure 2-4 Exit Botton Wiring

2.2.4 Alarm Input Device Wiring

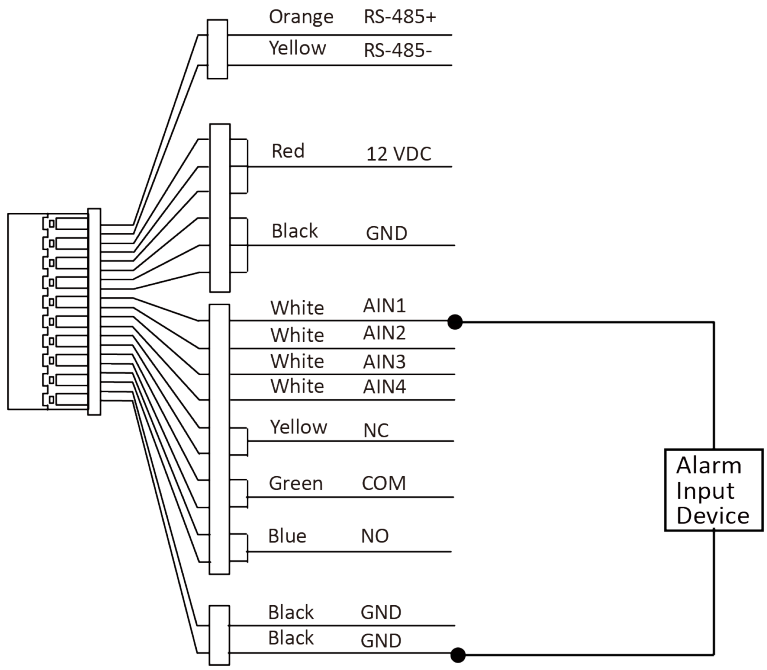

Figure 2-5 Alarm Input Device Wiring

Chapter 3 Installation

Note

- Make sure the device in the package is in good condition and all the assembly parts are included.
- Make sure your power supply matches your door station.
- Make sure all the related equipment is power-off during the installation.
- Check the product specification for the installation environment.

3.1 Accessory Introduction

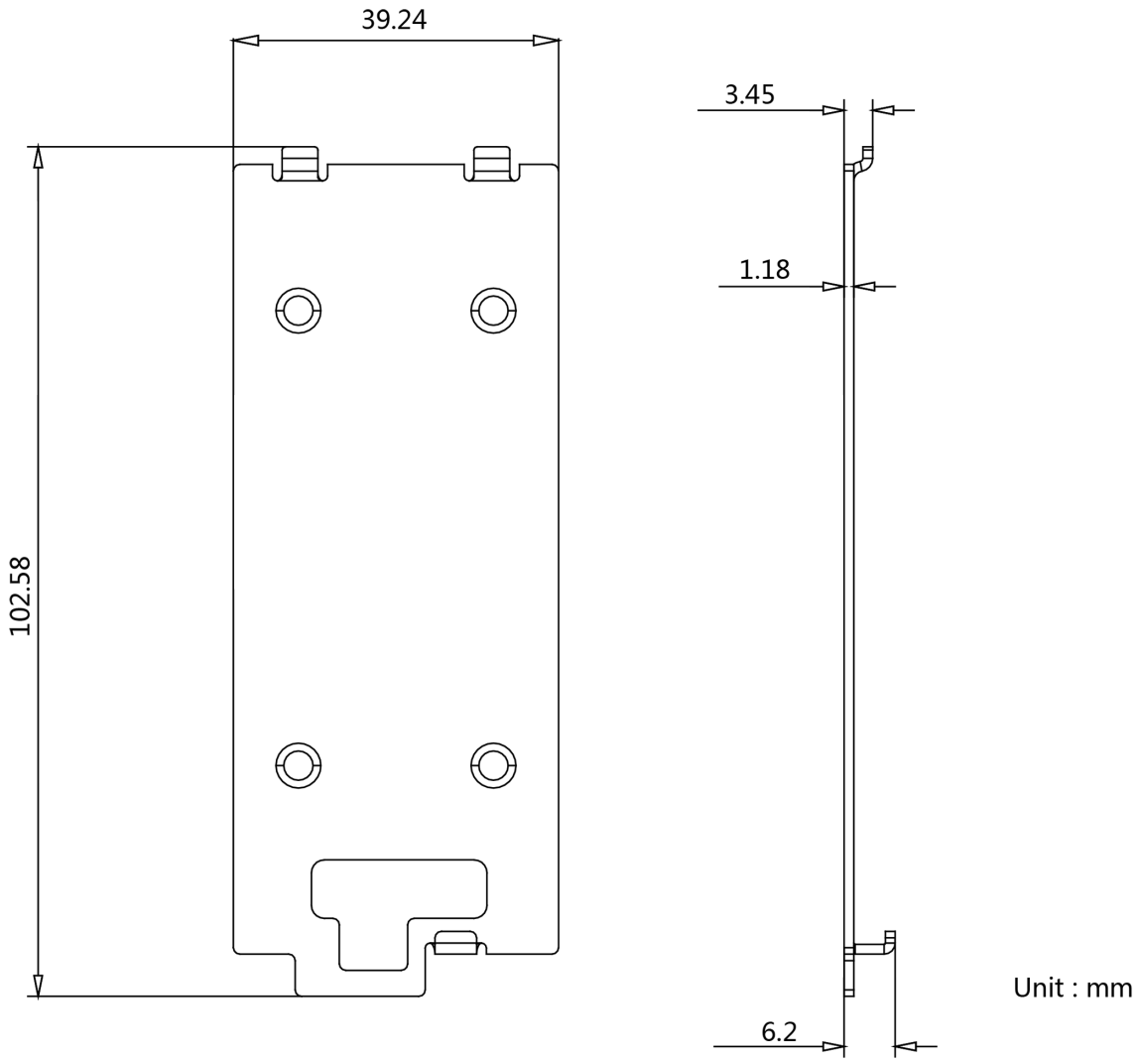

Figure 3-1 Accessory Introduction

Note

The dimension of the mounting plate is 102.58 mm × 39.24 mm × 6.2 mm.

3.2 Surface Mounting without Protective Shield

Before You Start

- Tools that you need to prepare for installation: Drill (ø2.846) and gradienter.
- Purchase the protective shield before installation.

Steps

1. Stick the mounting template on the wall. Drill screw holes according to the mounting template. Remove the template from the wall.

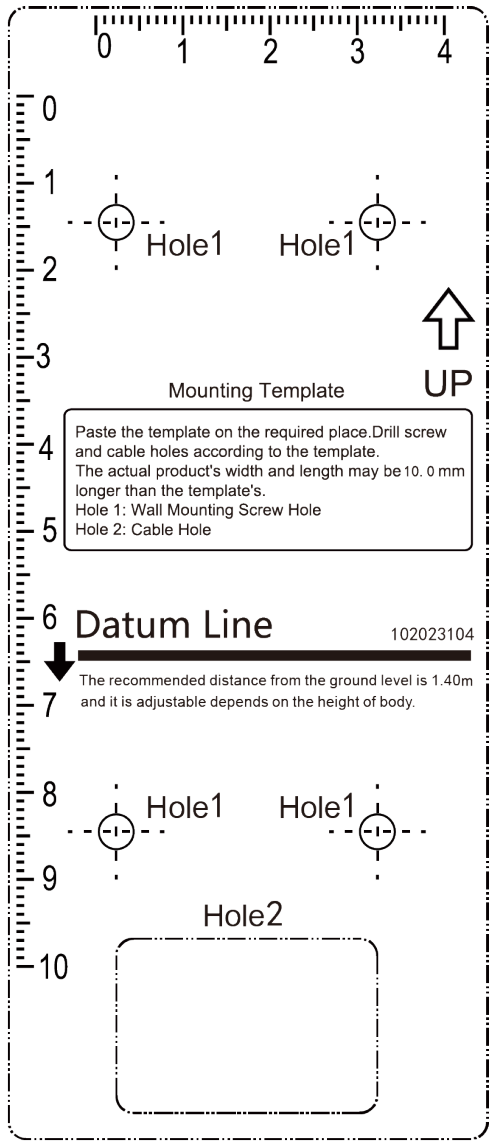

Figure 3-2 Mounting Template

2. Secure the mounting plate on the wall with 4 supplied screws according to the screw holes.
3. Install the villa door station to the mounting plate. Fix the device on the mounting plate with the set screw.

Note

Apply silicone sealant among the cable wiring area to keep the raindrop from entering.

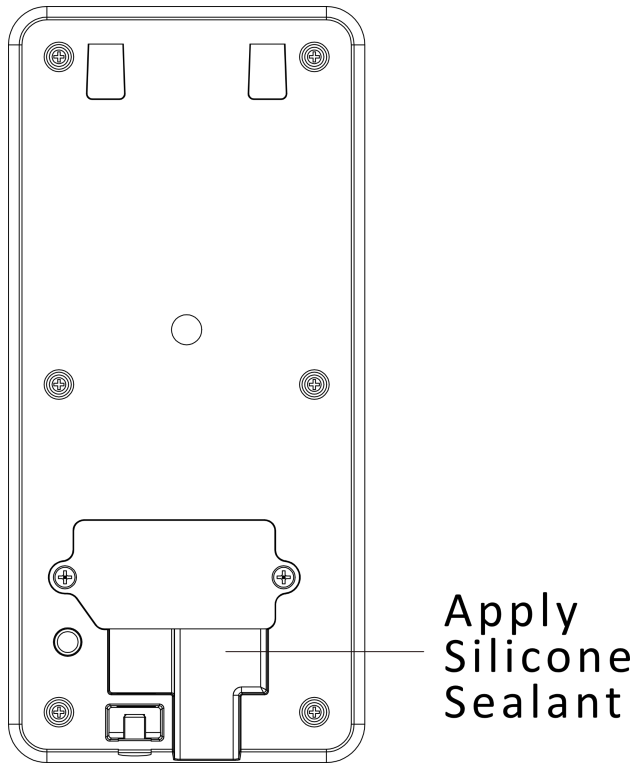

Figure 3-3 Apply Silicone Sealant

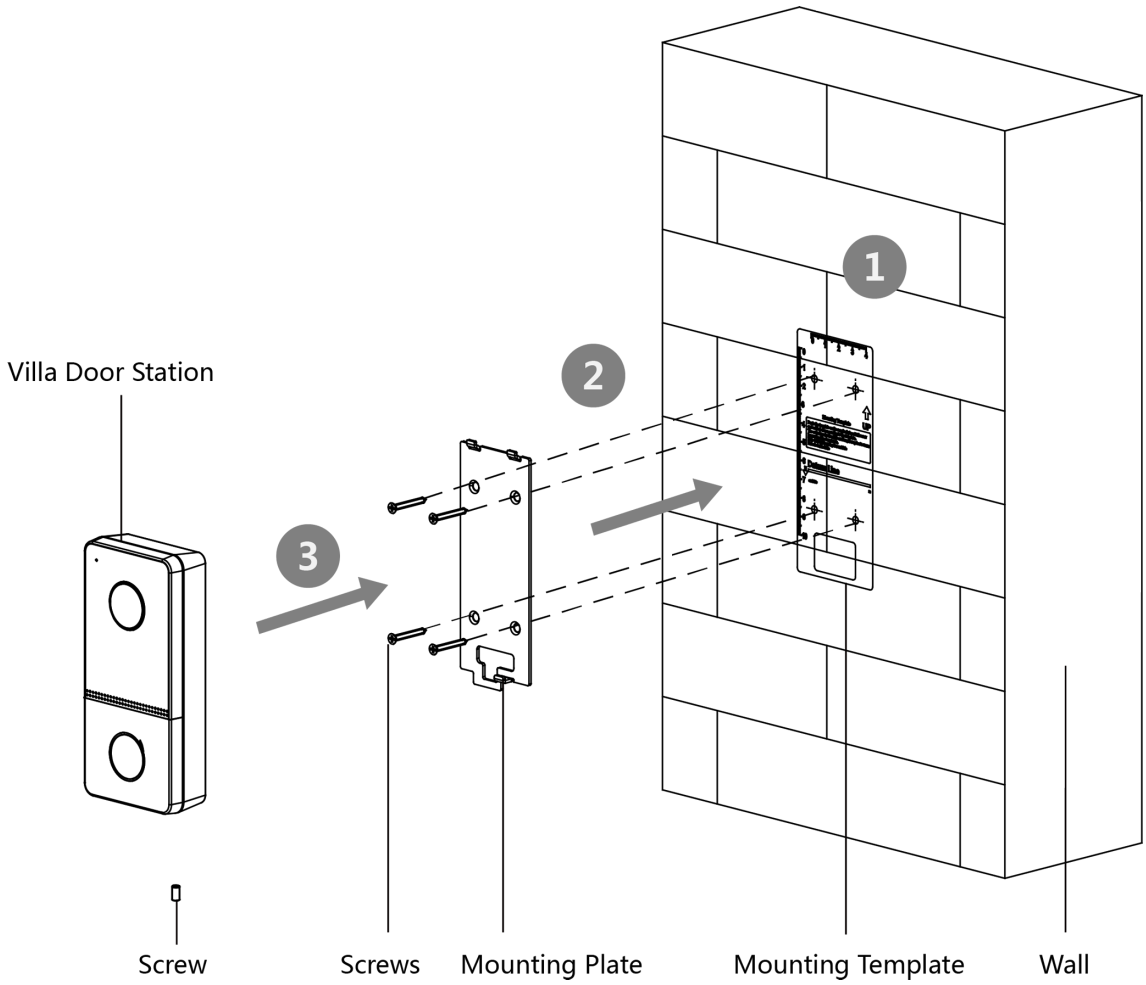

Figure 3-4 Surface Mounting without Protective Shield

3.3 Surface Mounting with Protective Shield

Before You Start

- Tools that you need to prepare for installation: Drill (ø2.846) and gradienter.
- Purchase the protective shield before installation.
- If installing outdoors, you are advised to install the device with protective shield.

Steps

1. Stick the mounting template on the wall. Drill screw holes according to the mounting template. Remove the template from the wall.

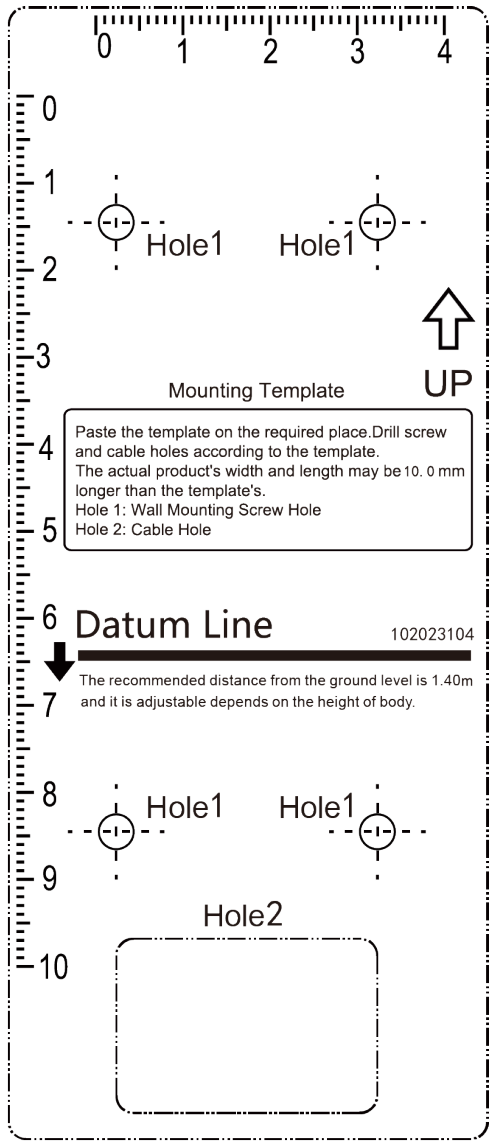

Figure 3-5 Mounting Template

2. Align the protective shield with the mounting template.
3. Secure the mounting plate and protective shield on the wall with 4 supplied screws according to the screw holes.
4. Install the villa door station to the mounting plate. Fix the device on the mounting plate with the set screw.

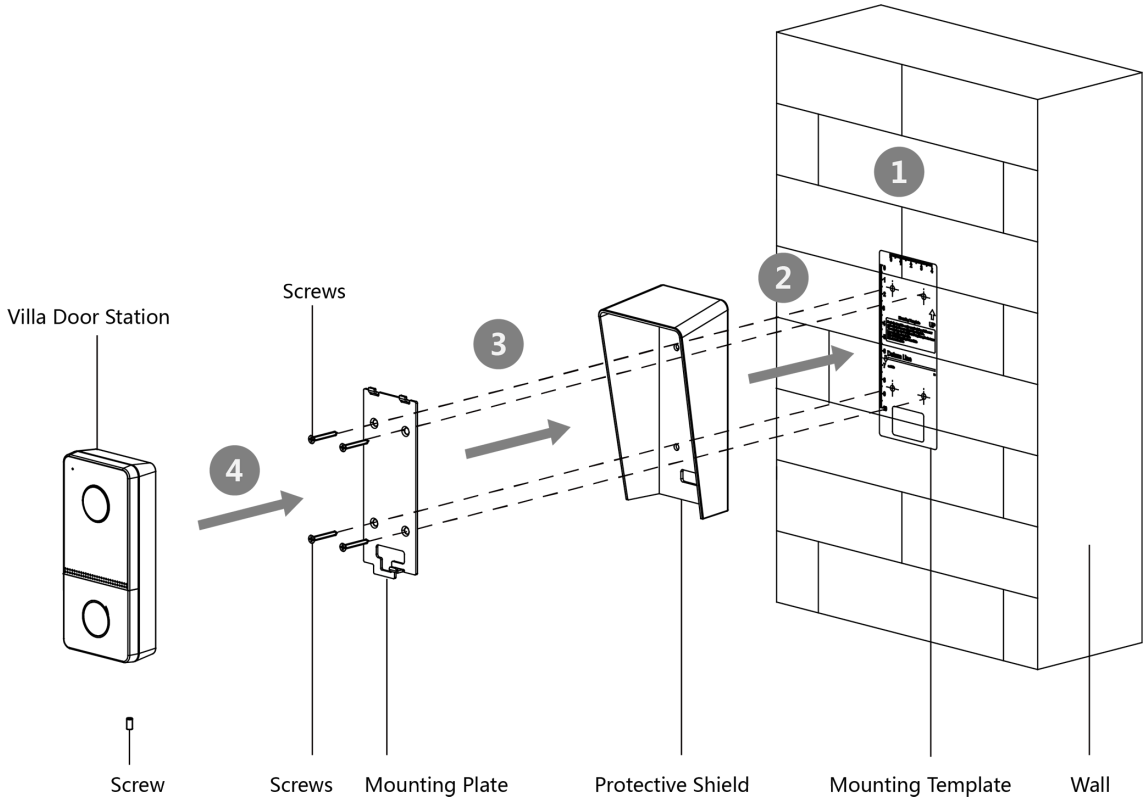

Figure 3-6 Surface Mounting with Protective Shield

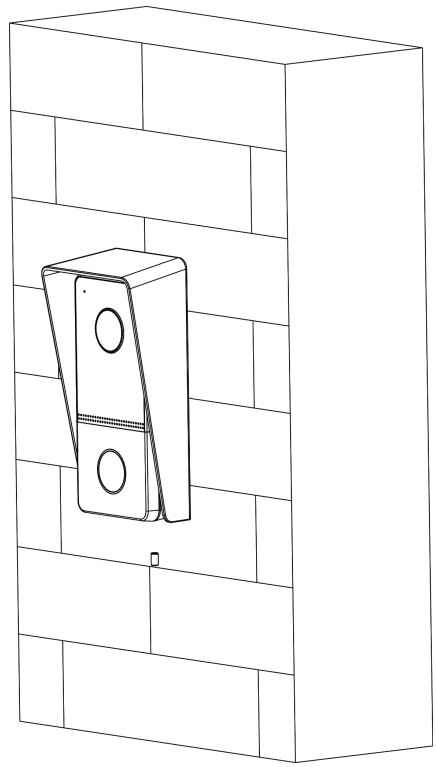

Figure 3-7 Finished View

Chapter 4 Activation

4.1 Activate Device via Web

You are required to activate the device first by setting a strong password for it before you can use the device.

Default parameters of the door station are as follows:

- Default IP Address: 192.0.0.65.
- Default Port No.: 8000.
- Default User Name: admin

Steps

1. Power on the device, and connect the device to the network.
2. Enter the IP address into the address bar of the web browser, and click **Enter** to enter the activation page.

   Note

   The computer and the device should belong to the same subnet.
3. Create and enter a password into the password field.
4. Confirm the password.
5. Click **OK** to activate the device.

4.2 Activate Device via Client Software

You can only configure and operate the door station after creating a password for the device activation.

Default parameters of door station are as follows:

- Default IP Address: 192.0.0.65.
- Default Port No.: 8000.
- Default User Name: admin.

Steps

1. Run the client software, click **Maintenance and Management → Device Management → Device** to enter the page.
2. Click **Online Device**.
3. Select an inactivated device and click **Activate**.
4. Create a password, and confirm the password.

Note

We highly recommend you to create a strong password of your own choosing (using a minimum of 8 characters, including at least three kinds of following categories: upper case letters, lower case letters, numbers, and special characters) in order to increase the security of your product. And we recommend you change your password regularly, especially in the high security system, changing the password monthly or weekly can better protect your product.

5. Click **OK** to activate the device.

Note

- When the device is not activated, the basic operation and remote operation of device cannot be performed.
- You can hold the **Ctrl** or **Shift** key to select multiple devices in the online devices, and click the **Activate** button to activate devices in batch.

4.3 Edit Network Parameters

To operate and configure the device via LAN (Local Area Network), you need connect the device in the same subnet with your PC. You can edit network parameters via **iVMS-4200** client software.

Steps

1. Select an online activated device and click the **Modify Netinfo**.
2. Edit the device IP address and gateway address to the same subnet with your computer.
3. Enter the password and click **OK** to save the network parameters modification.

Note

- The default port No. is 8000.
- The default IP address of the door station is 192.0.0.65.
- After editing the network parameters of device, you should add the devices to the device list again.

Chapter 5 Remote Configuration via Web

5.1 Live View

In the browser address bar, enter the IP address of the device, and press the Enter key to enter the login page.

Enter the user name and password and click **Login** to enter the Live View page. Or you can click **Live View** to enter the page.

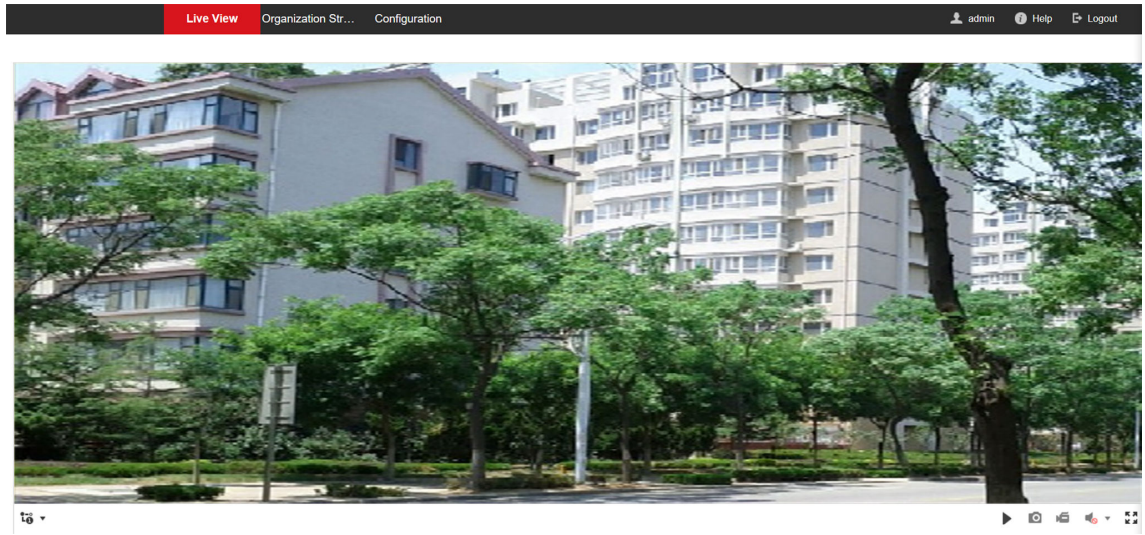

Figure 5-1 Live View

- You can start/stop live view, capture, record, audio on/off, two-way audio, etc.
- The stream type can be set as main stream or sub stream.
- For IE (Internet Explorer) users, the device support two-way audio communication.

5.2 User Management

You can add, delete or search the information of the user.

Click **User** to enter the settings page.

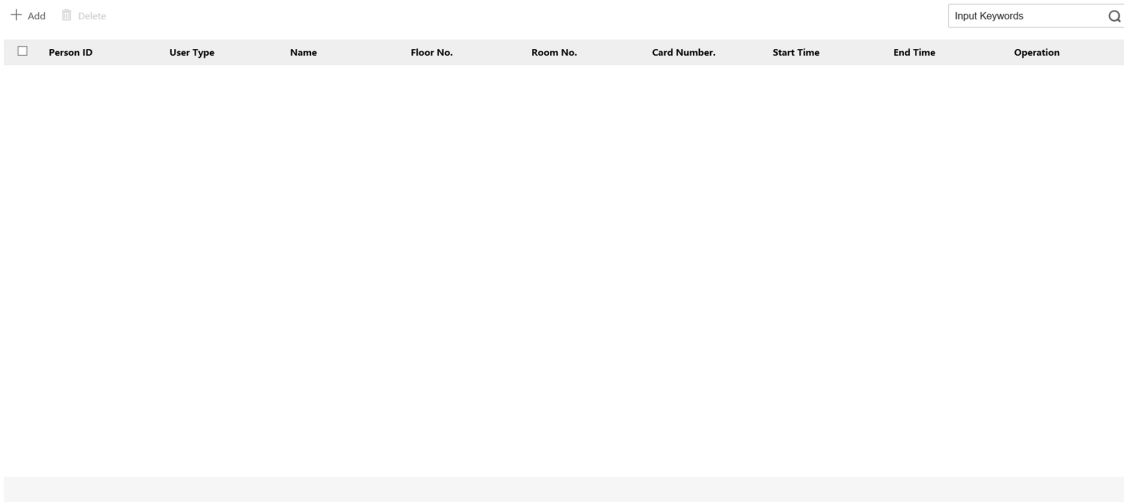

Figure 5-2 User Management

- Click **Add** and enter the **Name**, **Floor No.** and **Room No.** to add.
- Click **Edit** to modify the information of the user.
- Check the box of the user and click **Delete** to delete the selected user.
- Enter the keyword and click search icon. The information will display in the list.

Note

User management function may vary with different models. Please refer to the actual product.

5.3 Device Management

You can manage the linked device on the page.

Click **Device Management** to enter the settings page.

Figure 5-3 Device Management

Add Device

- Click **Add** to add the indoor station or sub door station. Enter the parameters and click **OK** to add.
- Click **Import**. Enter the information of the device in the template to import devices in batch.

Export

Click **Export** to export the information to the PC.

Delete

Select the device and click **Delete** to remove the selected device from the list.

Refresh

Click **Refresh** to get the device information.

Optional: Set Device Information.

- Click to edit device information.
- Click to delete device information from the list.
- Select **Status** and **Device Type** to search devices.

5.4 Parameters Settings

Click **Configuration** to set the parameters of the device.

Remote configuration in iVMS-4200 and Batch Configuration Tool is the same as that in Web. Here takes the configuration in web for example.

Note

Run the browser, click → **Internet Options** → **Security** to disable the Protected Mode.

5.4.1 Local Parameters Settings

You can configure the parameters of the live view, record files and captured pictures. The record files and captured pictures are the ones you record and capture by using the web browser. You can also set and view the saving paths of the captured pictures and recorded videos on the PC that running the web browser.

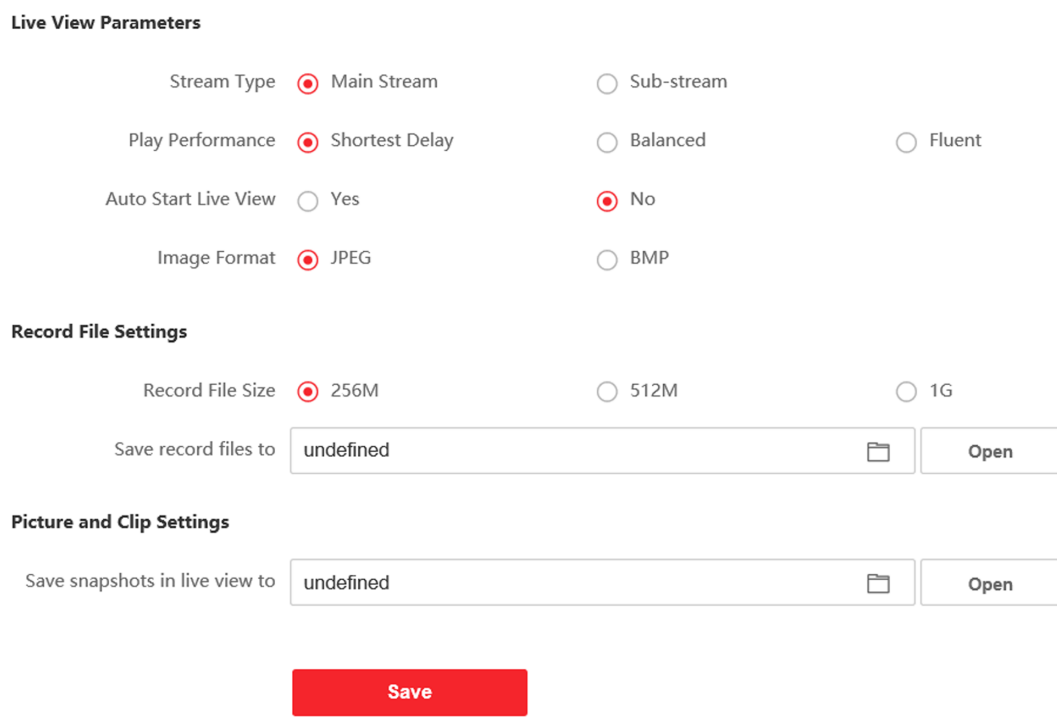

Figure 5-4 Local Parameters

Live View Parameters

Stream Type

Set the stream type as **Main Stream** or **Sub-stream**.

Play Performance

Set the live view performance to **Shortest Delay**, **Balanced** or **Fluent**.

Auto Start Live View

Check **Yes** to enable the function.

Image Format

Select the image format for picture capture.

Click **Save** to enable the settings.

Record File Parameters

Record File Size

Select the packed size of the manually recorded and downloaded video files to **256M**, **512M** or **1G**. After the selection, the maximum record file size is the value you selected.

Save record files to

Set the saving path for the manually recorded video files.

Click **Save** to enable the settings.

Picture and Clip Settings

Save snapshots in live view to

Set the saving path of the manually captured pictures in live view mode.

Note

You can click **Browse** to change the directory for saving the clips and pictures, and click **Open** to open the set folder of clips and picture saving.

Click **Save** to enable the settings.

5.4.2 System Settings

Follow the instructions below to configure the system settings, include System Settings, Maintenance, Security, and User Management, etc.

Click **System** to enter the settings page.

Basic Information

Click **System Settings → Basic Information** to enter the settings page. On the page, you can edit **Device Name** and **Device No.** Set the **Language** and **System Type** according to your needs.
Click **Save** to enable the settings.

Time Settings

Click **System Settings → Time Settings** to enter the settings page. Select the **Time Zone** of your location from the drop-down list.

- Enable **NTP**, set the **Server Address**, **NTP Port** and **Interval**.
- Enable **Manual Time Sync.**, set the time manually or check the **Sync. with computer time**.

Click **Save** to enable the settings.

DST

Click **System Settings → DST** to check **Enable DST**. Set the parameters according to your needs and click **Save** to enable the settings.

About

Click **System Settings → About** and click **Open Source Software Licenses** to view the details.

Maintenance

Click **Maintenance → Upgrade & Maintenance** to enter the settings page.

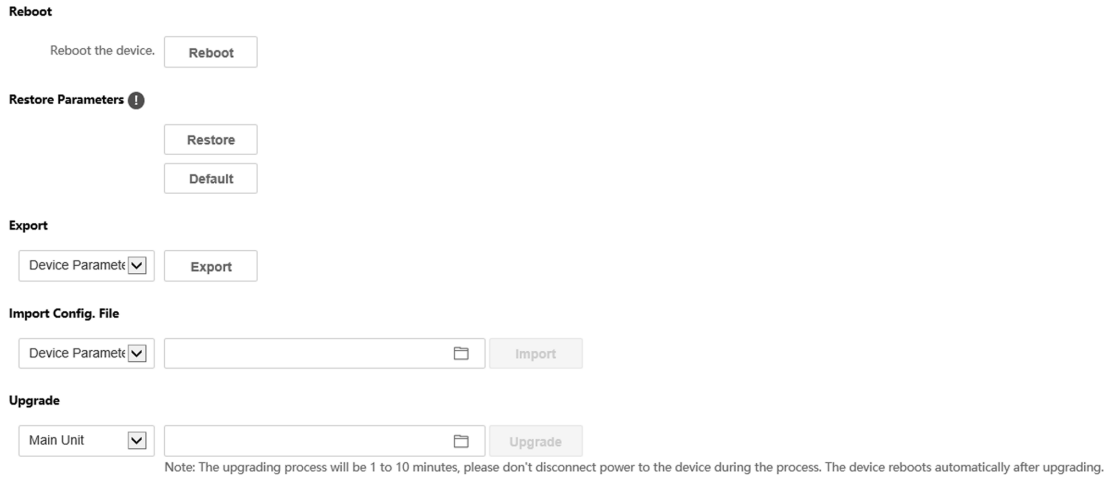

Figure 5-5 Maintenance

- Reboot: Click **Reboot** to reboot the device.
- **Restore**

  Click **Restore** to reset all the parameters, except the IP parameters and user information, to the default settings.

  Default

  Click **Default** to restore all parameters to default settings.
- Export parameters:
  1. Select **Device Parameters**, and click **Export** to pop up the dialog box.
  2. Set and confirm the encryption password.
  3. Click **OK** to export parameters.
- Import Config. File:
  1. Click browse icon to select the configuration file.
  2. Click **Import** and enter the encryption password to import.
- Upgrade: Click browse icon to select the upgrade file.

Note

The upgrading process will last 1 to 10 minutes, do not power off during the upgrading. The device reboots automatically after upgrading.

Security Service

Click **Security → Security Service** to enter the settings page. On the page, you can enable SSH according to your actual needs.
Click **Save** to enable the settings.

User Management

Click **User Management** to enter the settings page.

Administrator can edit the permission for the users.

Note

We highly recommend you to create a strong password of your own choosing (using a minimum of 8 characters, including at least three kinds of following categories: upper case letters, lower case letters, numbers, and special characters) in order to increase the security of your product. And we recommend you change your password regularly, especially in the high security system, changing the password monthly or weekly can better protect your product.

Online Users

Click **User Management → Online Users** to enter the page.

Refresh

No.	User Name	Level	Each IP address' segment should be less than 256. The first segment should be an integer between 1 and 223, and should not be 127. The fourth segment should not be 0 or 255.	User Operation Time
1	admin	Administrator	10.7.112.28	2020-02-27 15:43:23
2	admin	Administrator	10.6.113.103	2020-02-27 18:22:23

Total 2 Items

Figure 5-6 Online Users

Click **Refresh** to get the present information.

Arming/Disarming Information

Click **User Management → Arming/Disarming Information** to view the information. Click **Refresh** to get the present information.

5.4.3 Network Settings

TCP/IP Settings

TCP/IP settings must be properly configured before you operate the device over network. The device supports IPv4.

Steps

1. Click **Network → Basic Settings → TCP/IP** to enter the settings page.

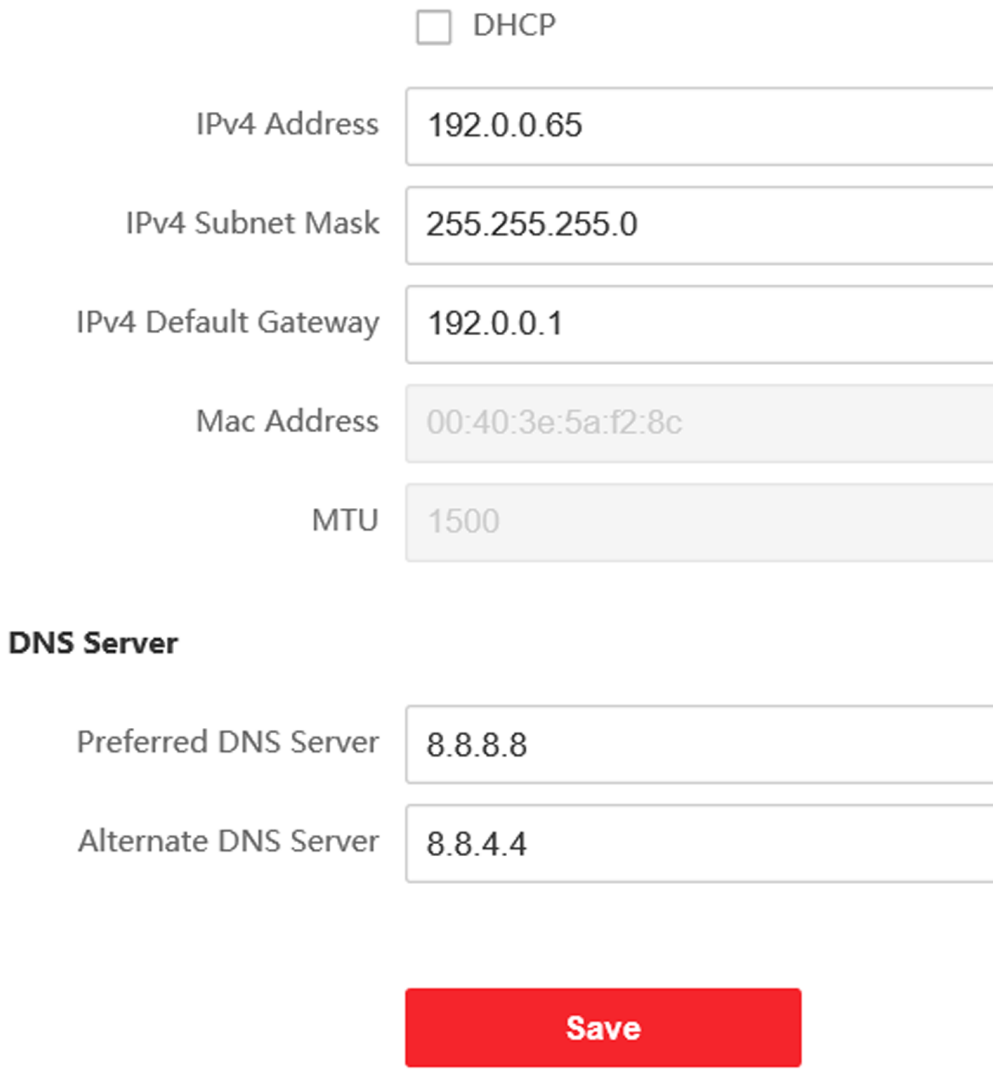

Figure 5-7 TCP/IP Settings

2. Configure the network parameters.
- Check **DHCP**, the device will get the parameters automatically.
- Set the **IPv4 Address**, **IPv4 Subnet Mask** and **IPv4 Default Gateway** manually.

3. Configure the corresponding DNS server parameters.

4. Click **Save** to enable the settings.

Port Settings

Steps

1. Click **Network → Basic Settings → Port** to enter the settings page.

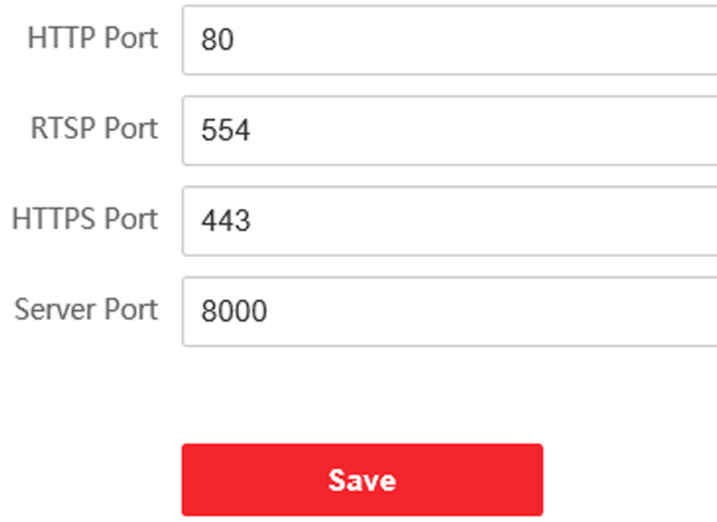

Figure 5-8 Port Settings

2. Set the ports of the device.

HTTP Port

The default port number is 80, and it can be changed to any port No. which is not occupied.

HTTPS Port

The default port number is 443, and it can be changed to any port No. which is not occupied.

RTSP Port

The default port number is 554.

Server Port

The default server port number is 8000, and it can be changed to any port No. ranges from 2000 to 65535.

3. Click **Save** to enable the settings.

SIP Setting

Steps

1. Click **Network → Basic Settings → SIP** to enter the settings page.

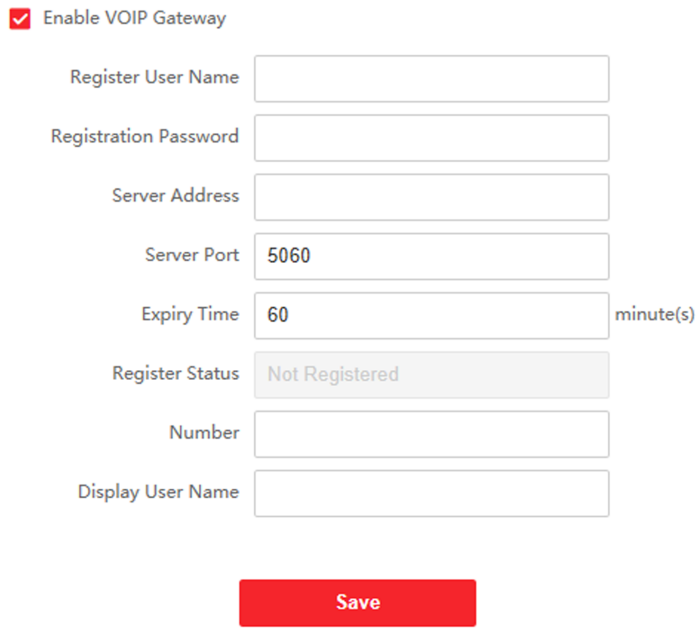

Figure 5-9 SIP Settings

2. Check **Enable VOIP Gateway**.
3. Configure the SIP parameters.
4. Click **Save** to enable the settings.

FTP Settings

Steps

1. Click **Network → Advanced → FTP** to enter the settings page.

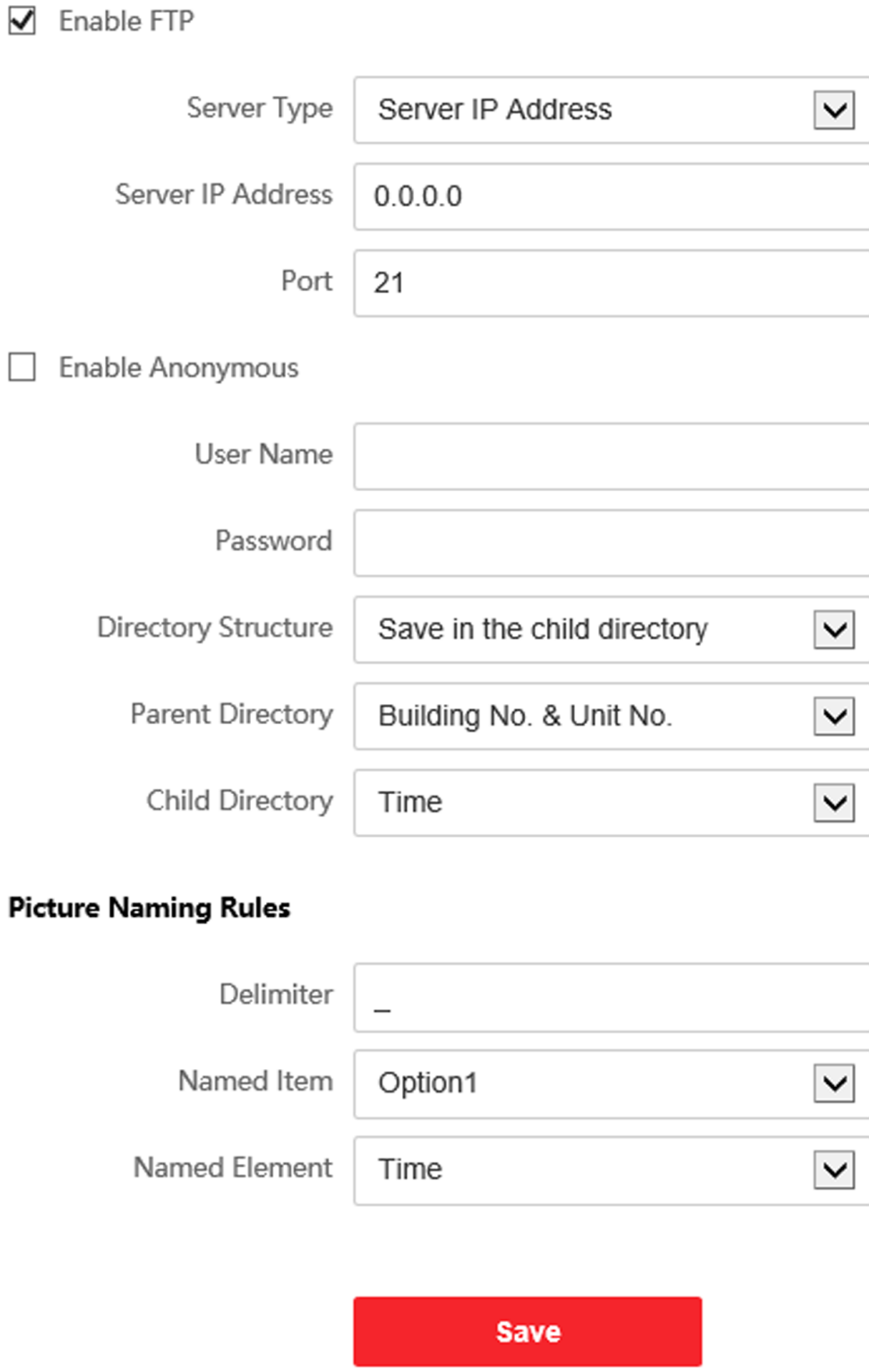

Figure 5-10 FTP Settings

2. Check **Enable FTP**.
3. Select **Server Type**.
4. Input the **Server IP Address** and **Port**.
5. Configure the FTP Settings, and the user name and password are required for the server login.
6. Set the **Directory Structure**, **Parent Directory** and **Child Directory**.
7. Set the picture naming rules.
8. Click **Save** to enable the settings.

Platform Access

Platform access provides you an option to manage the devices via platform.

Steps

1. Click **Network → Advanced Settings → Platform Access** to enter the settings page.
2. Check the checkbox of **Enable** to enable the function.
3. Select the **Platform Access Mode**.

   Note

   Hik-Connect is an application for mobile devices. With the App, you can view live image of the device, receive alarm notification and so on.

4. Create a **Stream Encryption/Encryption** for the device.

   Note

   6 to 12 letters (a to z, A to Z) or numbers (0 to 9), case sensitive. You are recommended to use a combination of no less than 8 letters or numbers.

5. Click **Save** to enable the settings.

5.4.4 Video & Audio Settings

Video Parameters

Steps

1. Click **Video/Audio → Video** to enter the settings page.

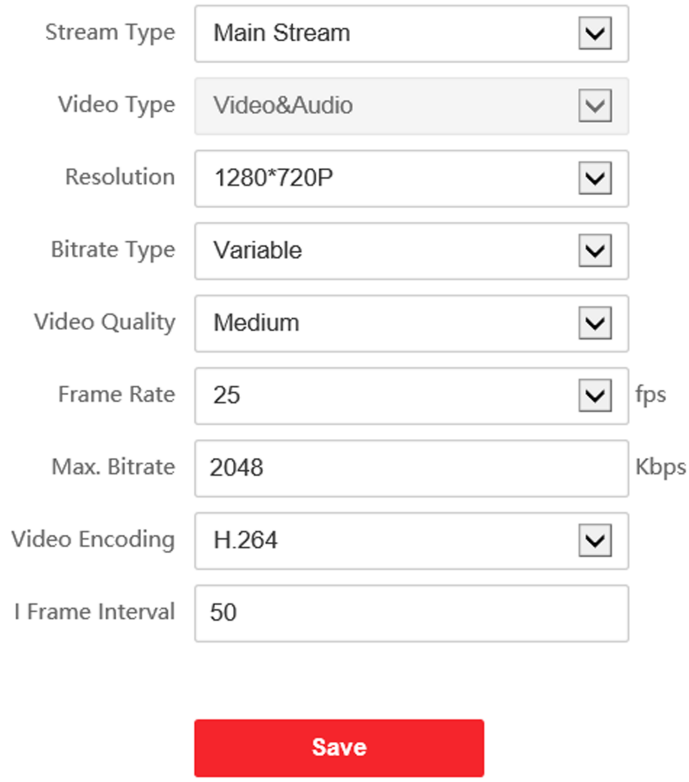

Figure 5-11 Video Parameters

2. Select the **Stream Type**.
3. Configure the video parameters.

Stream Type

Select the stream type to main stream or sub stream.

Video Type

Select the stream type to video stream, or video & audio composite stream. The audio signal will be recorded only when the **Video Type** is **Video & Audio**.

Resolution

Select the resolution of the video output.

Bitrate Type

Select the bitrate type to constant or variable.

Video Quality

When bitrate type is selected as Variable, 6 levels of video quality are selectable.

Frame Rate

Set the frame rate. The frame rate is to describe the frequency at which the video stream is updated and it is measured by frames per second (fps). A higher frame rate is advantageous when there is movement in the video stream, as it maintains image quality throughout.

Max. Bitrate

Set the max. bitrate from 32 to 16384 Kbps. The higher value corresponds to the higher video quality, but the better bandwidth is required.

Video Encoding

The device supports H.264.

I Frame Interval

Set I Frame Interval from 1 to 400.

4. Click **Save** to save the settings.

Audio Parameters

Steps

1. Click **Video/Audio → Audio** to enter the settings page.

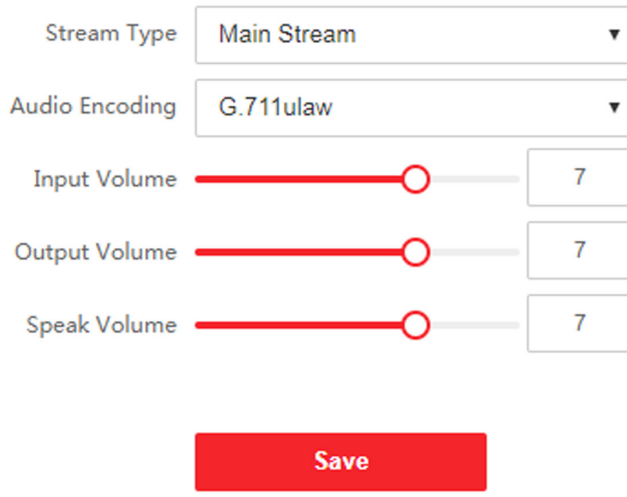

Figure 5-12 Audio Settings

2. Configure the stream type and the audio encoding type.

Stream Type

Select the stream type to main stream or sub stream.

Audio Encoding

The device support G.711ulaw and G.711 alaw.

3. Adjust the **Input Volume**, **Output Volume** and **Speak Volume**.

Note

Available range of volume: 0 to 10.

4. Click **Save** to save the settings.

5.4.5 Image Settings

Display Settings

Configure the image adjustment, backlight settings and other parameters in display settings.

Steps

1. Click **Image → Display Settings** to enter the display settings page.

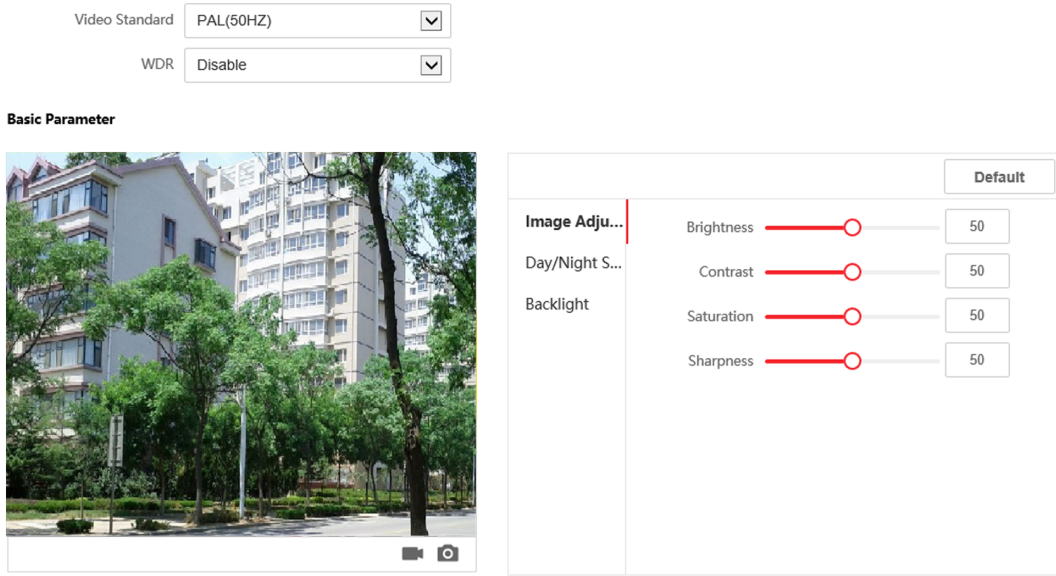

Figure 5-13 Display Settings

2. Select the **Format**.
3. Set the display parameters.

WDR

Wide Dynamic Range can be used when there is a high contrast of the bright area and the dark area of the scene.

Brightness

Brightness describes bright of the image, which ranges from 1 to 100.

Contrast

Contrast describes the contrast of the image, which ranges from 1 to 100.

Saturation

Saturation describes the colorfulness of the image color, which ranges from 1 to 100.

Sharpness

Sharpness describes the edge contrast of the image, which ranges from 1 to 100.

4. Set the **Day/Night Mode**.

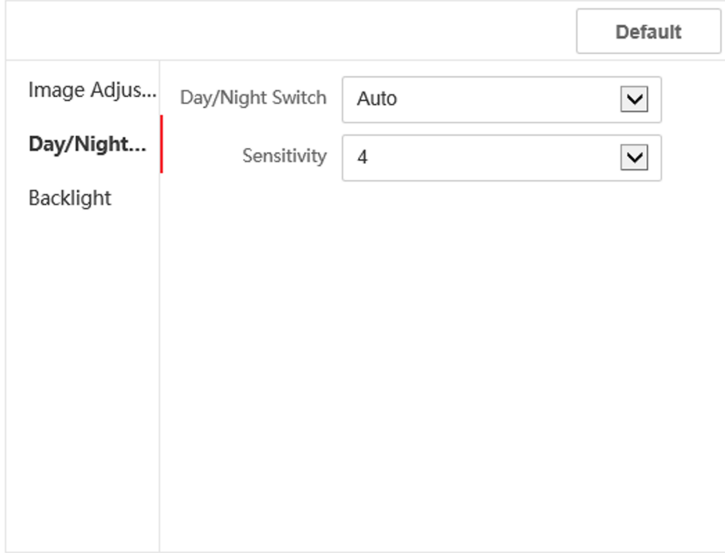

Figure 5-14 Day/Night Mode

- Set **Day Mode** or **Night Mode** manually.
- Set the mode as **Auto** and edit the sensitivity according to your needs.
- Set the mode as **Scheduled-Switch**. Set the start time and end time.

Note

Daytime is from configured start time to configured time. The rest of the time is set as night by default.

5. Set the backlight parameters.

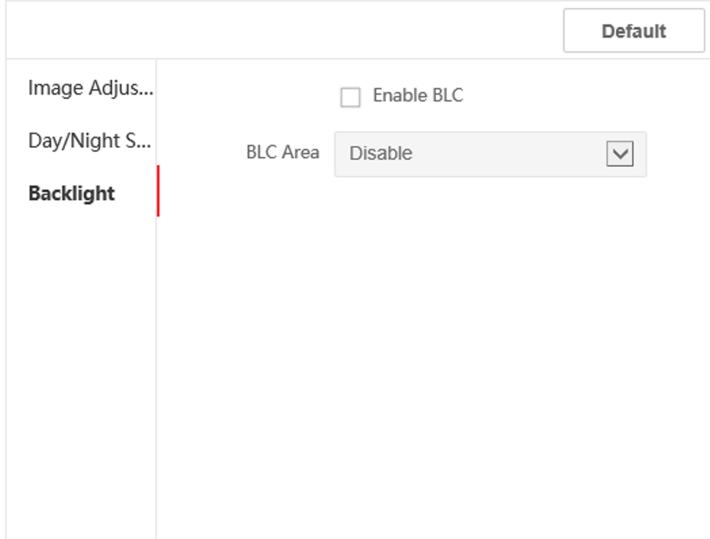

Figure 5-15 Backlight

1) Check the checkbox to enable BLC.
2) Select **BLC Area**.

6. Click **Save** to enable the settings.

OSD Settings

You can customize the camera name, time/date format, display mode, and OSD size displayed on the live view.

Steps

1. Click **Image → OSD Settings** to enter the settings page.
2. Check the corresponding checkbox to select the display of camera name, date or week if required.
3. Edit the **Camera Name**.
4. Select from the drop-down list to set the **Time Format** and **Date Format**.
5. Adjust the OSD position.
6. Click **Save** to enable the settings.

Target Cropping

Steps

1. Click **Image → Crop** to enter the page.
2. Check **Enable Target Cropping** to enable the function.
3. Click to capture photo.
4. Click to start recording.

5. Select **Cropping Resolution**.
6. Click **Save**.

Note

- You can select **Cropping Resolution** as **704*576**, **1280*720**, or **1920*1080**.
- You can zoom in or zoom out the image by selecting **Cropping Resolution** after clicking **Save**.

5.4.6 Event Settings

Motion Detection

Motion detection detects the moving objects in the configured security area, and a series of actions can be taken when the alarm is triggered.

Steps

1. Click **Event → Motion** to enter the settings page.

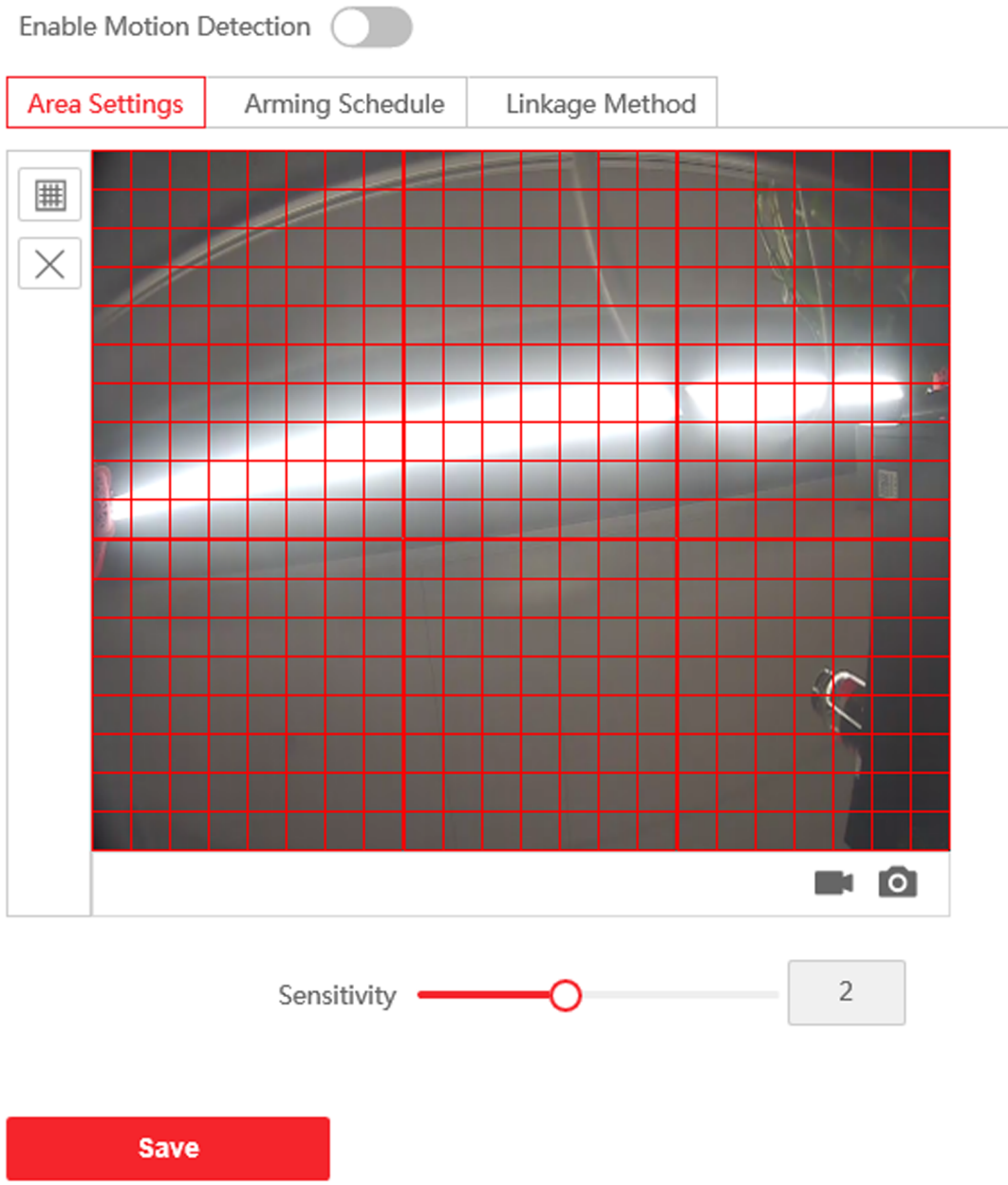

Figure 5-16 Motion Detection

2. Slide **Enable Motion Detection** to enable the function.
3. Click **Draw Area**. Click and drag the mouse on the live video to draw a motion detection area. Click **Save** to save the settings.

Clear Area	Click **X** to clear all of the areas.
Adjust Sensitivity	Move the slider to set the sensitivity of the detection.

4. Click **Arming Schedule** to edit the arming schedule.

5. Click on the time bar and drag the mouse to select the time period. Click **Save** to save the settings.

   Delete Schedule Click **Delete** to delete the current arming schedule.

6. Click **Linkage Method** to enable the linkages.

   Notify Security Center

   Send an exception or alarm signal to the remote management software when an event occurs.

7. Click **Save** to enable the settings.

Event Linkage

Steps

1. Click **Event → Basic Event → Event Linkage** to enter the settings page.

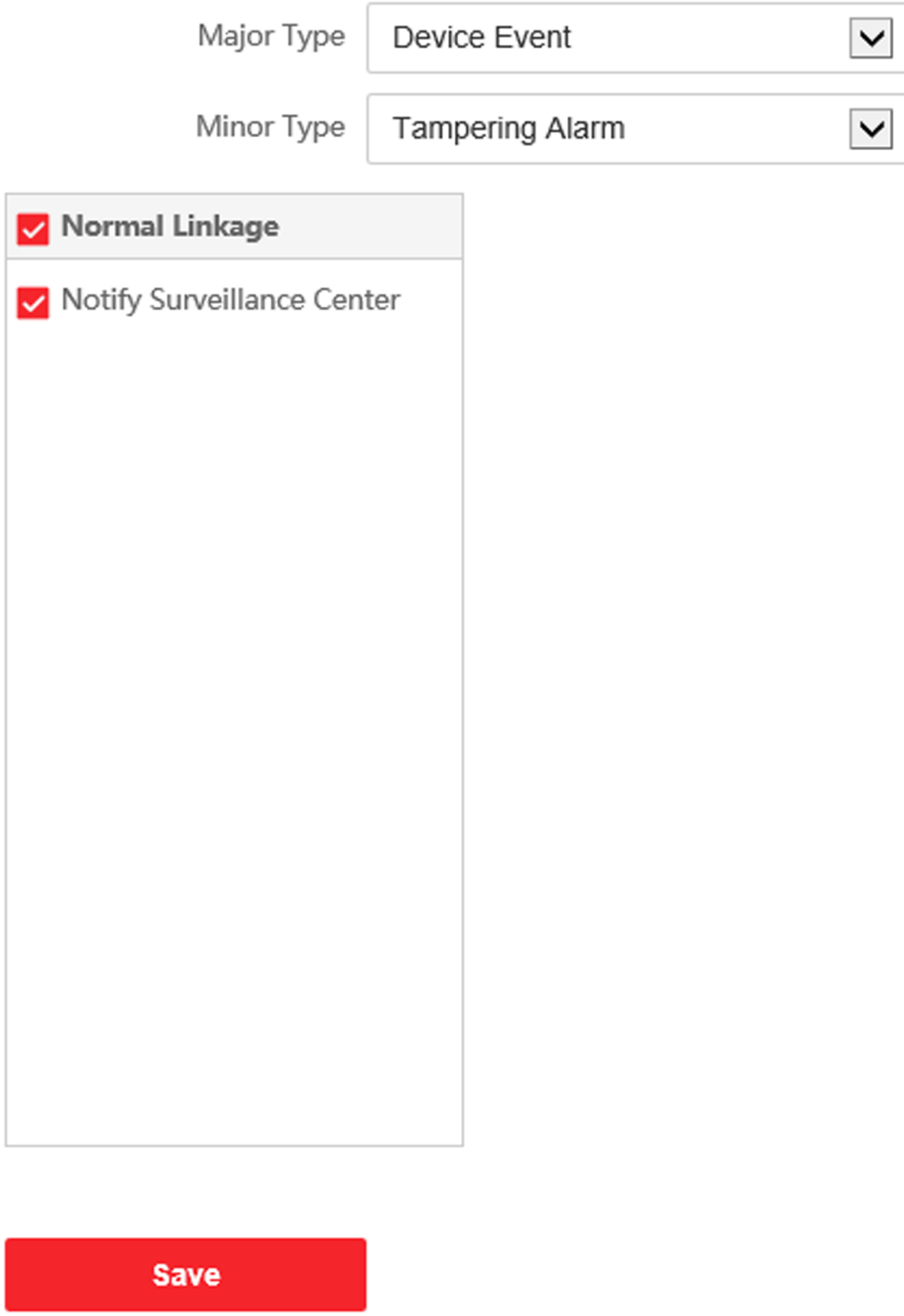

Figure 5-17 Event Linkage

2. Select the **Major Type** as **Device Event** or **Door Event**.
3. Select the type of the **Normal Linkage** for the event.
4. Click **Save** to enable the settings.

5.4.7 Schedule Settings

You can create call schedule, or else the device will call indoor station all day by default.

Steps

1. Click **Schedule → Video Intercom → Call Schedule** .
2. Click the next row below **Enable Indoor Station All Day by Default**.
3. Enter **Schedule Name**.
4. Select **Call Type**.
5. Set **Weekly Schedule**.
   1) Click **Weekly Schedule**.

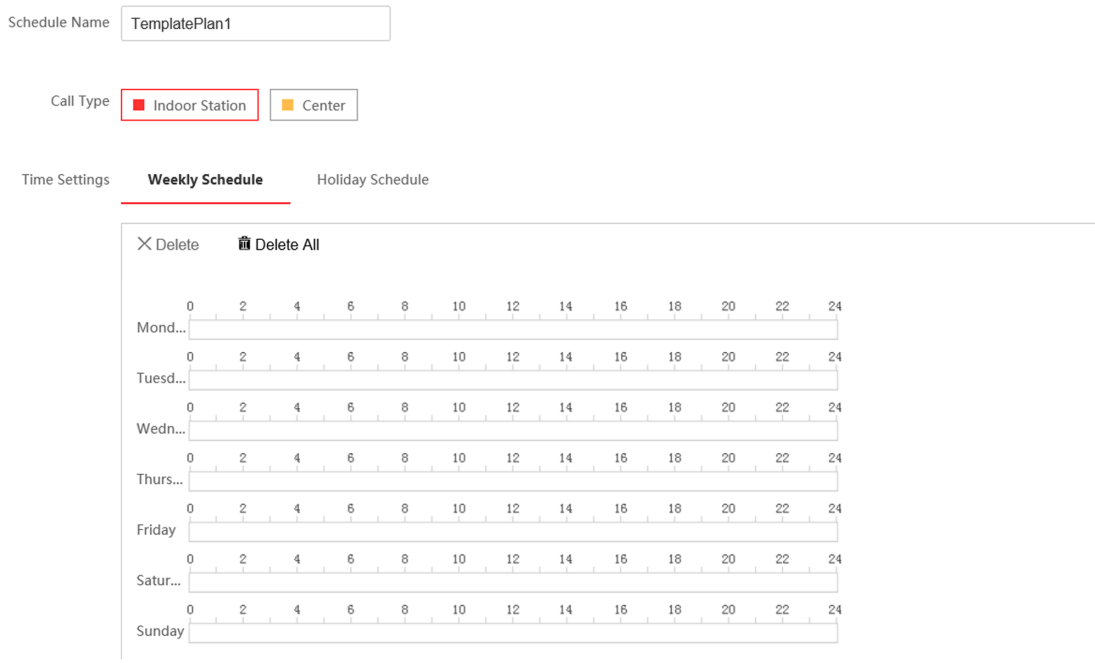

Figure 5-18 Weekly Schedule

   2) Drag mouse to set the schedule according to the actual needs.
   3) **Optional:** Click the copy icon to copy the schedule to other days according to the actual needs.
   4) Click **Save**.
6. Set **Holiday Schedule**.
   1) Click **Holiday Schedule**.

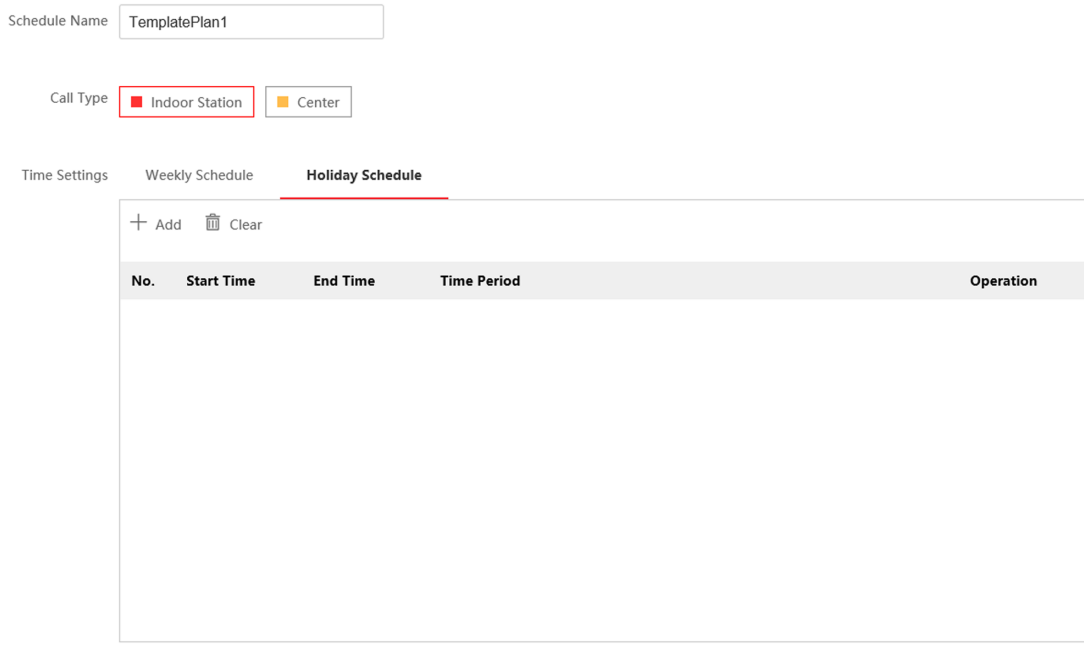

Figure 5-19 Holiday Schedule

2) Click **Add**.
3) Set **Start Time** and **End Time**.
4) Select **Call Type**.
5) Drag mouse to set the schedule according to the actual needs.
6) Click **OK**.
7) You can edit or delete the schedule according to the actual needs.
8) Click **Save**.

Note

The holiday schedule have higher priority than weekly schedule when you set the two schedule at the same time.

5.4.8 Intercom Settings

Device No. Settings

Steps

1. Click **Device No.** to enter the page.

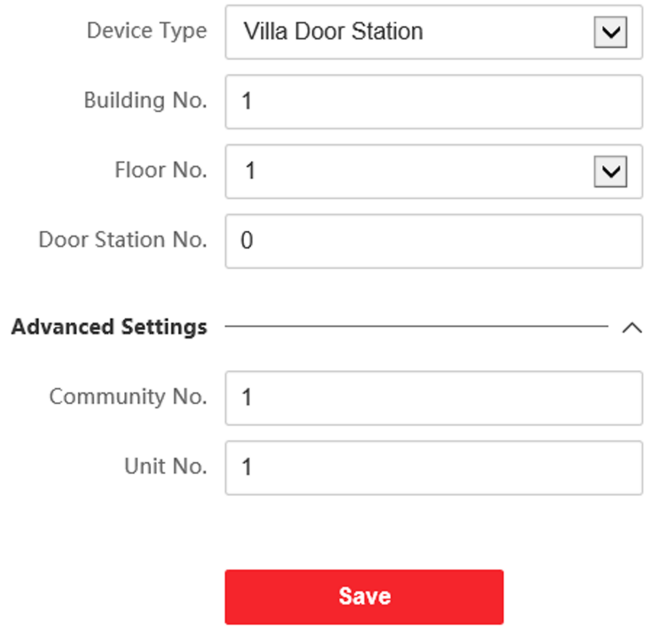

Figure 5-20 Villa Door Station No. Settings

2. Select the device type from the drop-down list, and set the corresponding information including **Building No.**, **Floor No.**, **Door Station No.**, **Community No.** and **Unit No.**

Note

When you select **Doorphone** as **Device Type**, only **Community No.**, **Building No.** and **Unit No.** can be set.

3. Click **Save** to enable the device number configuration.

Note

- For main door station (D series or V series), the No. is 0.
- For sub door station (D series or V series), the No. cannot be 0. The No.of sub door station ranges from 1 to 99.
- For each villa or building, at least one main door station (D series or V series) should be configured, and one sub door stations (D series or V series) can be customized.
- For one main door station (D series or V series), up to 8 sub door stations can be configured.

Linked Network Settings

Steps

1. Go to **Intercom → Session Settings** to enter the settings page.
2. Set **Register Number** and **Registration Password**.
3. Set **Main Station IP** and **VideoIntercom Server IP**.

4. Enable Protocol 1.0.
5. Click **Save** to enable the settings.

Time Parameters

Go to **Intercom → Time Parameters** to enter the page.

Configure **Max. Call Duration**, **Max. Message Duration**, **Max. Ring Duration**, and click **Save**.

Note

- Max. call duration between the module indoor station and client ranges from 90 s to 120 s. The call will end automatically when the actual calling duration is longer than the configured one.
- Max. message duration ranges from 30 s to 60 s. The message will end automatically when the actual message duration is longer than the configured one.
- Max. ring duration refers to the maximum duration of the module indoor station when it is called without being accepted. Max. ring duration ranges from 65 s to 255 s.

Ring-Back Tone Settings

Click **Intercom → Ringbacktone Settings** to enter the settings page.

Click **Add** to select the ring tone from PC.

Note

Available Audio Format: WAV、 AAC, Size: Less than 600 KB, Sample Rate: 8000Hz, Mono.

Press Button to Call

Steps

1. Go to **Intercom → Press Button to Call** to enter the settings page.

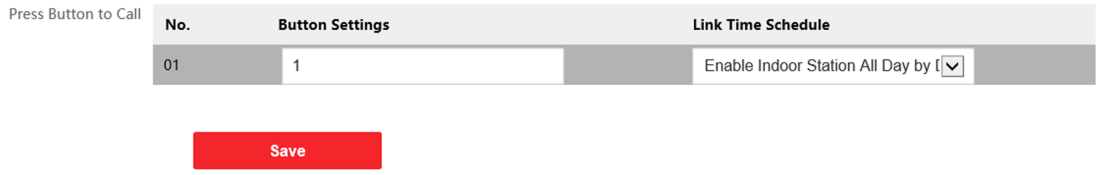

Figure 5-21 Press Button to Call

2. Edit room No. in the button settings and select **Link Time Schedule**.

Note

- The number of buttons may vary with different models. Please refer to the actual product.
- The schedule settings refers to ***Schedule Settings*** for details.

3. Click **Save** to enable the settings.

Number Settings

Link the room No. and SIP numbers.

Click **Number Settings** to enter the page.

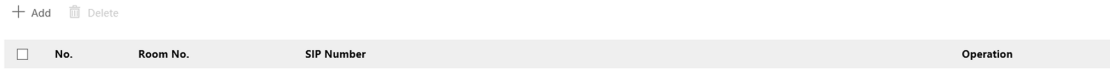

Figure 5-22 Number Settings

Click **Add**, set the **Room No.** and SIP numbers in the pop-up dialog box.

5.4.9 Access Control Settings

Door Parameters

Steps

1. Click **Access Control → Door Parameters** to enter the settings page.

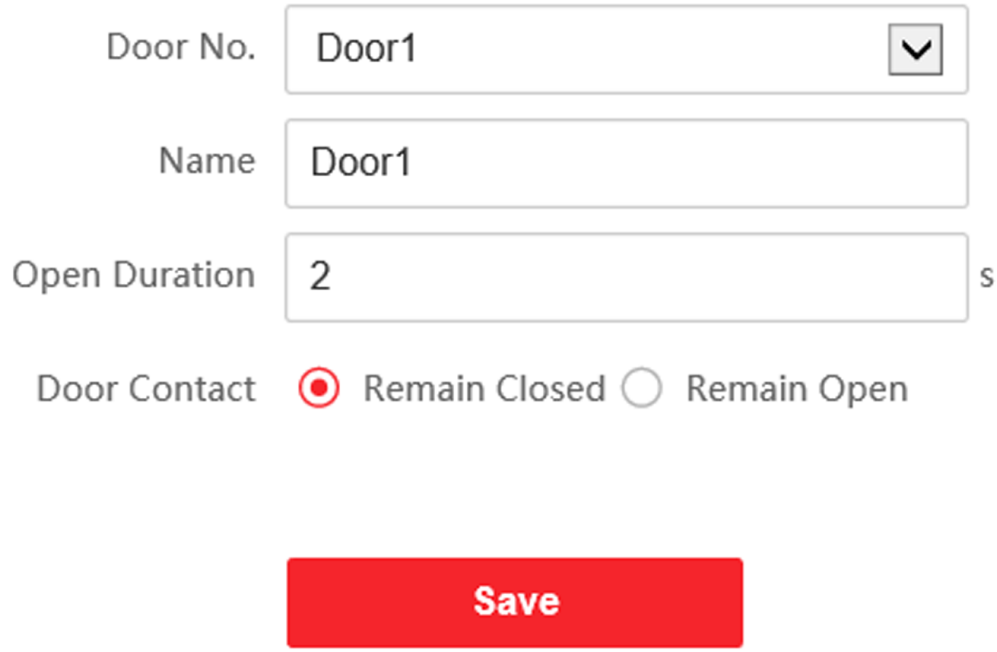

Figure 5-23 Door Parameters

2. Select the door and edit the door name.
3. Edit **Open Duration**.
4. Set door contact status.
5. Click **Save** to enable the settings.

Elevator Control

Before You Start

- Make sure your door station is in the mode of main door station. Only the main door station support elevator control function.
- Make sure your door station has been connected to the elevator controller via RS-485 wire if you want to use RS-485 interface.

Steps

1. Click **Access Control → Elevator Control** to enter the corresponding configuration page.

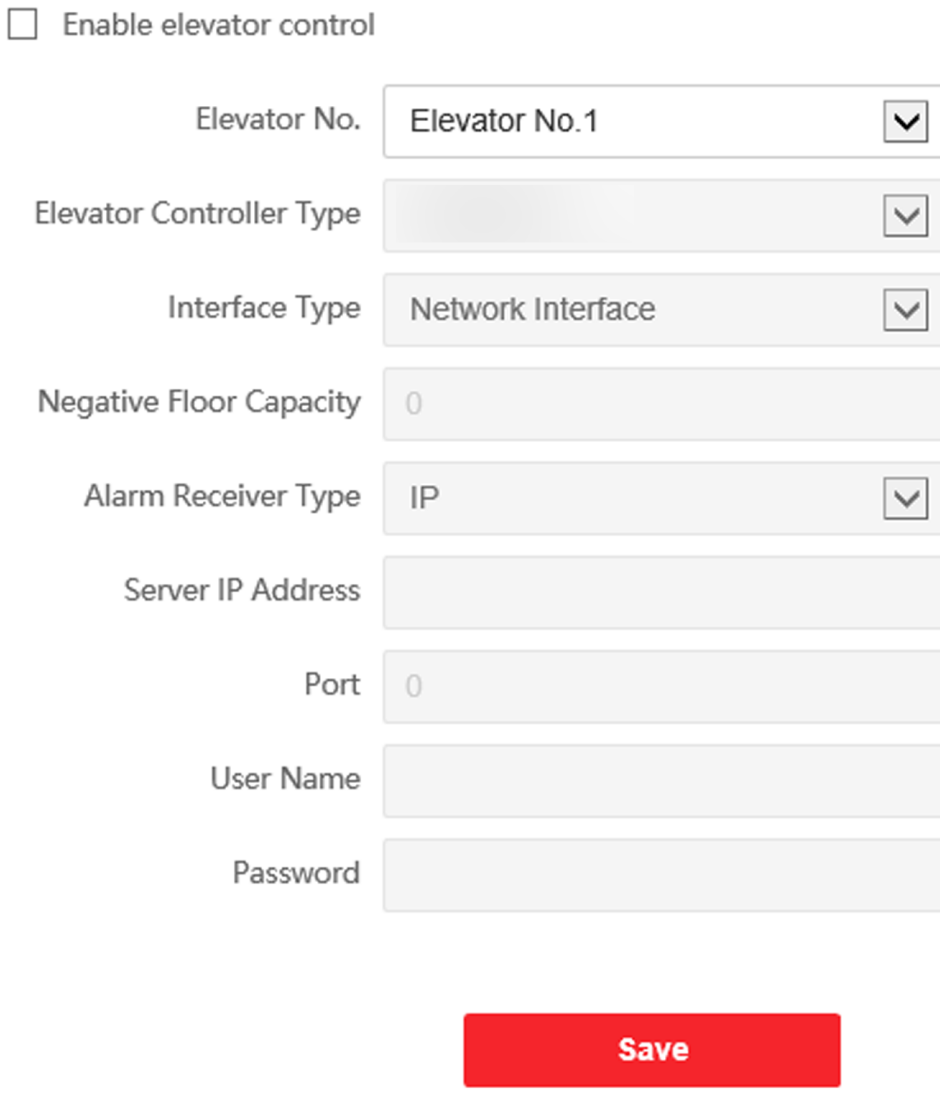

Figure 5-24 Elevator Control

2. Check to enable elevator control function.
3. Select an Elevator No., and select an elevator controller type for the elevator.
4. Set the Negative Floor.
5. Select the Interface Type as RS-485 or Network Interface. And enable the elevator control.
   - If you select RS-485, make sure you have connected the door station to the elevator controller with RS-485 wire.
   - If you select Network interface, enter the elevator controller's IP address, port No., user name, and password.
6. Click **Save** to enable the settings.

Note

- Up to 4 elevator controllers can be connected to one door station.
- Up to 10 negative floors can be added.
- Make sure the interface types of elevator controllers, which are connected to the same door station are consistent.

Chapter 6 Configuration via Client Software

6.1 Device Management

Device management includes device activation, adding device, editing device, and deleting device, and so on.

After running the iVMS-4200, video intercom devices should be added to the client software for remote configuration and management.

6.1.1 Add Online Device

Before You Start

Make sure the device to be added is in the same subnet with your computer. Otherwise, please edit network parameters first.

Steps

1. Click **Online Device** to select an active online device.
2. Click **Add**.
3. Enter corresponding information, and click **Add**.

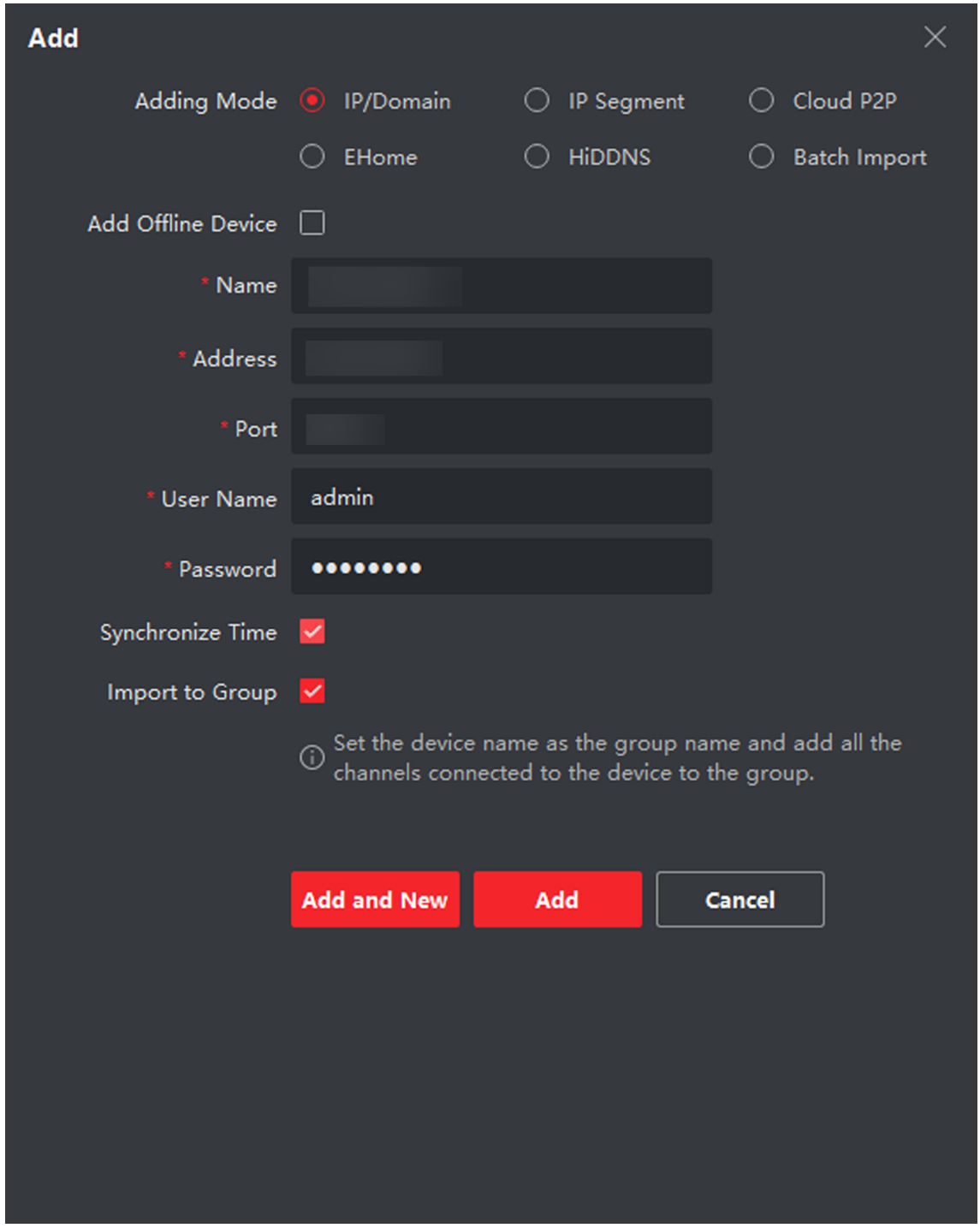

Figure 6-1 Add to the Client

6.1.2 Add Device by IP Address

Steps

1. Click **+Add** to pop up the adding devices dialog box.
2. Select **IP/Domain** as **Adding Mode**.
3. Enter corresponding information.
4. Click **Add**.

6.1.3 Add Device by IP Segment

You can add many devices at once whose IP addresses are among the IP segment.

Steps

1. Click **+Add** to pop up the dialog box.
2. Select **IP Segment** as **Adding Mode**.
3. Enter corresponding information, and click **Add**.

6.2 Live View via Door Station

Steps

1. On the main page of the client software, click **Main View** to enter the Live View page.
2. In the left list of the window, double-click the device IP or click the play icon to live view.
3. **Optional:** On the Live View page, control-click and select **Capture** to get the picture of the live view.

6.3 Organization Management

On the main page of the Client Software, click **PersonalManagement** to enter the configuration page.

6.3.1 Add Organization

Steps

1. In the organization list on the left, click **+Add**.
2. Enter the **Organization Name** as desired.
3. Click **OK** to save the adding.
4. **Optional:** You can add multiple levels of organizations according to the actual needs.
   1) You can add multiple levels of organizations according to the actual needs.
   2) Then the added organization will be the sub-organization of the upper-level organization.

Note

Up to 10 levels of organizations can be created.

6.3.2 Modify and Delete Organization

You can select the added organization and click to modify its name.

You can select an organization, and click **X** button to delete it.

Note

- The lower-level organizations will be deleted as well if you delete an organization.
- Make sure there is no person added under the organization, or the organization cannot be deleted.

6.4 Person Management

After adding the organization, you can add person to the organization and manage the added person such as issuing cards in batch, importing and exporting person's information in batch, etc.

Note

- Up to 2,000 persons can be added.
- Up to 5 cards can be added to each person.

6.4.1 Add Person

Person information is necessary for the video intercom system. And when you set linked device for the person, the intercom between intercom devices can be realized.

Steps

1. Select an organization in the organization list and click **Add** on the Person panel to pop up the adding person dialog.

   Note

   The Person No. will be generated automatically and is editable.

2. Set basic person information.
   1) Enter basic information: name, tel, birthday details, effective period and email address.

      Note

      The length of person name should be less than 15 characters.

   2) Click **Add** face to upload the photo.

Note

The picture should be in *.jpg format.

Click Upload	Select the person picture from the local PC to upload it to the client.
Click Take Phone	Take the person's photo with the PC camera.
Click Remote Collection	Take the person's photo with the collection device.

3. Issue the card for the person.
   1) Click **Credential → Card** .
   2) Click **+** to pop up the Add Card dialog.
   3) Select **Normal Card** as **Card Type**.
   4) Enter the **Card No.**
   5) Click **Read** and the card(s) will be issued to the person.
4. Link the device to the person.
   1) Set the linked devices.

      Linked Device

      You can bind the indoor station to the person.

      Note

      If you select **Analog Indoor Station** in the Linked Device, the **Door Station** field will display and you are required to select the door station to communicate with the analog indoor station.

      Room No.

      You can enter the room No. of the person.
   2) Click **OK** to save the settings.
5. Click **Add** to save the settings.

6.4.2 Modify and Delete Person

Select the person and click **Edit** to open the editing person dialog.

To delete the person, select a person and click **Delete** to delete it.

Note

If a card is issued to the current person, the linkage will be invalid after the person is deleted.

6.4.3 Change Person to Other Organization

You can move the person to another organization if needed.

Steps

1. Select the person in the list and click **Change Organization**.
2. Select the organization to move the person to.
3. Click **OK** to save the settings.

6.4.4 Import and Export Person Information

The person information can be imported and exported in batch.

Steps

1. Exporting Person: You can export the added persons' information in Excel format to the local PC.
   1) After adding the person, you can click **Export Person** to pop up the following dialog.
   2) Click **...** to select the path of saving the exported Excel file.
   3) Check the checkboxes to select the person information to export.
   4) Click **OK** to start exporting.
2. Importing Person: You can import the Excel file with persons information in batch from the local PC.
   1) Click **Import Person**.
   2) You can click **Download Template for Importing Person** to download the template first.
   3) Input the person information to the downloaded template.
   4) Click **...** to select the Excel file with person information.
   5) Click **OK** to start importing.

6.4.5 Get Person Information from Device

If the added device has been configured with person information (including person details, fingerprint, issued card information), you can get the person information from the device and import to the client for further operation.

Steps

Note

This function is only supported by the device the connection mothod of which is TCP/IP when adding the device.

1. In the organization list on the left, click to select an organization to import the persons.
2. Click **Get from Device** to pop up the dialog box.
3. The added device will be displayed.
4. Click to select the device and then click **Get** to start getting the person information from the device.

Note

- The person information, including person details, person's fingerprint information (if configured), and the linked card (if configured), will be imported to the selected organization.
- If the person name stored in the device is empty, the person name will be filled with the issued card No. after importing to the client.

6.4.6 Issue Card in Batch

You can issue multiple cards for the person with no card issued in batch.

Steps

1. Click **Batch Issue Cards** to enter the dialog page. All the added person with no card issued will display in the Person(s) with No Card Issued list.

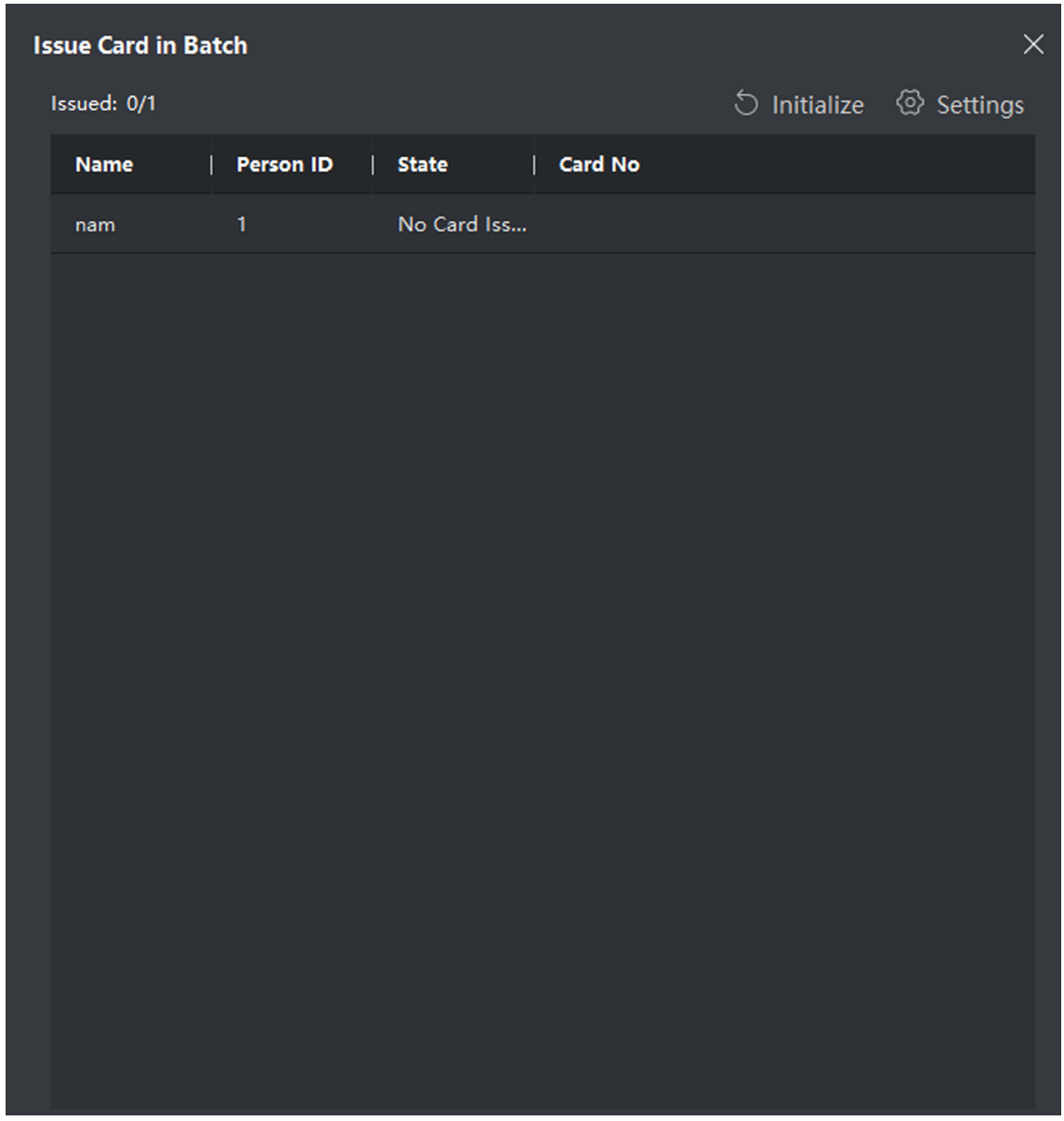

Figure 6-2 Issue Card in Batch

2. Click **Settings**.

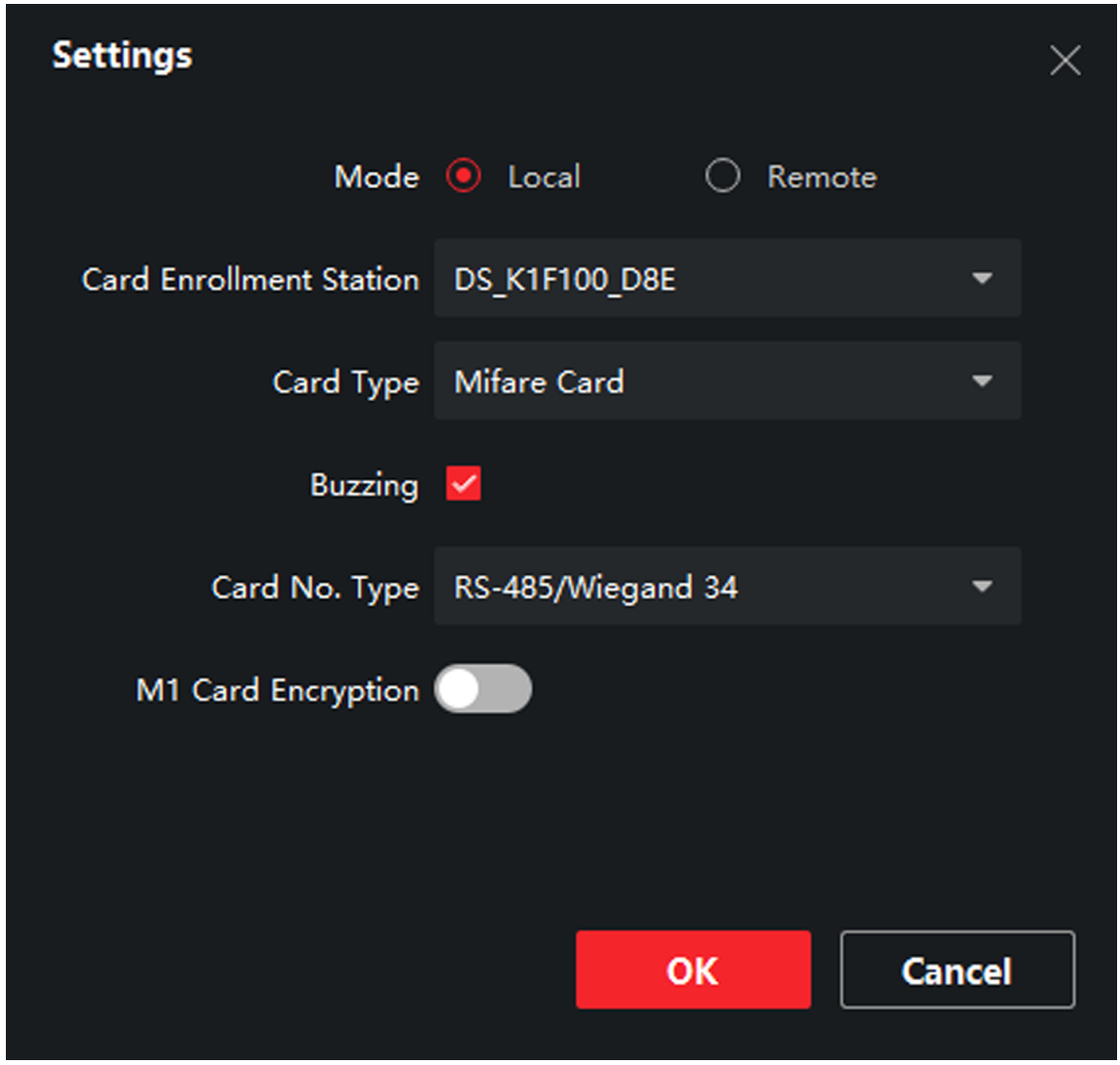

Figure 6-3 Card Settings

3. Select **Card Type** and **Card No. Type**.
4. Click **OK** to save the settings.

Result

After issuing the card to the person, the person and card information will display in the Person(s) with Card Issued list.

6.5 Video Intercom Settings

The Video Intercom Management module provides the function of video intercom, checking call logs and managing notice via the iVMS-4200 Client Software.

Note

For the user with access control module permissions, the user can enter the Access Control module and manage video intercom and search information.

You should add the device to the software and configure the person to link the device in Access Control module before your configuration remotely.

On the main page, click **AccessControlInfo → Video Intercom → Video Intercom** on the left bar to enter the Video Intercom page.

6.5.1 Receive Call from Door Station

Steps

1. Select the client software in the page to start calling the client and an incoming call dialog will pop up in the client software.
2. Click **Answer** to answer the call. Or click **Hang Up** to decline the call.
3. After you answer the call, you will enter the In Call page.

Adjust the Volume of Loudspeaker	Click to adjust the volume of loudspeaker.
Hang Up	Click **Hang Up** to hang up.
Adjust the Volume of Microphone	Click to adjust the volume of microphone.
Unlock Remotely	For door station, you can click to open the door remotely.

Note

- One video intercom device can only connect with one client software.
- The maximum ring duration can be set from 15s to 60s via the Remote Configuration of the video intercom device.
- The maximum speaking duration between indoor station and iVMS-4200 can be set from 120s to 600s via the Remote Configuration of indoor station.
- The maximum speaking duration between door station and iVMS-4200 can be set from 90s to 120s via the Remote Configuration of door station.

6.5.2 Release Notice

You can create different types of notices and send them to the residents. Four notice types are available, including Advertising, Property, Alarm and Notice Information.

Before You Start

Make sure the person has been added to the client.

Steps

1. On the video intercom settings page, click **Notice** to enter the page.
2. Click **+Add** to pop up the adding dialog box.
3. Select the person according to your needs.
4. Edit the **Subject**, **Type** and **Information**.
5. Click **View** to select the picture.
6. Click **Send**.

Note

- Up to 63 characters are allowed in the Subject field.
- Up to 6 pictures in the JPGE format can be added to one notice. And the maximum size of one picture is 512KB.
- Up to 1023 characters are allowed in the Information field.

6.5.3 Search Video Intercom Information

Search Call Logs

Steps

1. On the Video Intercom page, click **Call Log** to enter the page.

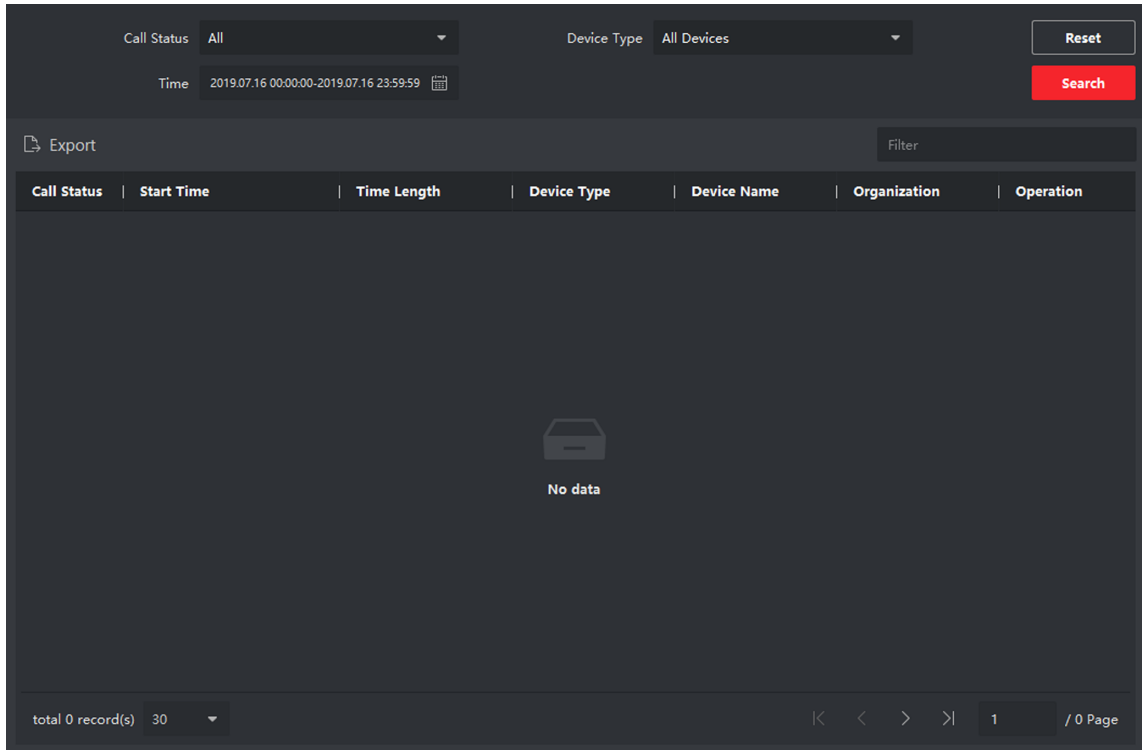

Figure 6-4 Search Call Logs

2. Set the search conditions, including call status, device type, start time and end time.

   Call Status

   Click ˅ to unfold the drop-down list and select the call status as **Dialed**, **Received** or **Missed**. Or select **All** to search logs with all statuses.

   Device Type

   Click ˅ to unfold the drop-down list and select the device type as **Indoor Station**, **Door Station**, **Outer Door Station** or **Analog Indoor Station**. Or select **All Devices** to search logs with all device types.

   Start Time/End Time

   Click the time icon to specify the start time and end time of a time period to search the logs.

   Reset the Settings Click **Reset** to reset all the configured search conditions.

3. Click **Search** and all the matched call logs will display on this page.
4. **Optional:** Check the detailed information of searched call logs, such as call status, ring/speaking duration, device name, resident organization, etc.
5. **Optional:** Input keywords in the Search field to filter the desired log.
6. **Optional:** Click **Export** to export the call logs to your PC.

Search Notice

Steps

1. On the Video Intercom page, click **Notice** to enter the page.
2. Set the search conditions, including notice type, start time and end time.

   Type

   Select **Advertising Information**, **Property Information**, **Alarm Information** or **Notice Information** as **Type** according to your needs.

   Start Time/End Time

   Click the time icon to specify the start time and end time of a time period to search the logs.

   Reset the Settings Click **Reset** to reset all the configured search conditiions.
3. Click **Search** and the matched notice will display on this page.
4. **Optional:** Click **Export** to export the notices to your PC.

6.5.4 Upload Armed Information

Steps

1. On the main page, click upper right → **Tool** → **DeviceGuard** to enter the page.
2. Enable to arm or disarm the device.

   Note

   - While device has been added to the client software, the device armed by default.
   - When the device is armed, the alarm logs upload to the client software automatically.
   - Click **Alarm Application** → **Event Search** to search the alarm logs.
3. **Optional:** Click **Arm All** or **Disarm All** to arm or disarm all the device.

Appendix A. Communication Matrix and Device Command

Communication Matrix

Scan the following QR code to get the device communication matrix.
Note that the matrix contains all communication ports of Hikvision access control and video intercom devices.

Figure A-1 QR Code of Communication Matrix

Device Command

Scan the following QR code to get the device common serial port commands.
Note that the command list contains all commonly used serial ports commands for all Hikvision access control and video intercom devices.

Figure A-2 Device Command

See Far, Go Further