DS-K3B801SX Series Swing Barrier

Quick Start Guide

Legal Information

©2021 Hangzhou Hikvision Digital Technology Co., Ltd. All rights reserved.

About this Manual

The Manual includes instructions for using and managing the Product. Pictures, charts, images and all other information hereinafter are for description and explanation only. The information contained in the Manual is subject to change, without notice, due to firmware updates or other reasons. Please find the latest version of this Manual at the Hikvision website (***https://www.hikvision.com/***).
Please use this Manual with the guidance and assistance of professionals trained in supporting the Product.

Trademarks

HIKVISION and other Hikvision's trademarks and logos are the properties of Hikvision in various jurisdictions.
Other trademarks and logos mentioned are the properties of their respective owners.

Disclaimer

TO THE MAXIMUM EXTENT PERMITTED BY APPLICABLE LAW, THIS MANUAL AND THE PRODUCT DESCRIBED, WITH ITS HARDWARE, SOFTWARE AND FIRMWARE, ARE PROVIDED "AS IS" AND "WITH ALL FAULTS AND ERRORS". HIKVISION MAKES NO WARRANTIES, EXPRESS OR IMPLIED, INCLUDING WITHOUT LIMITATION, MERCHANTABILITY, SATISFACTORY QUALITY, OR FITNESS FOR A PARTICULAR PURPOSE. THE USE OF THE PRODUCT BY YOU IS AT YOUR OWN RISK. IN NO EVENT WILL HIKVISION BE LIABLE TO YOU FOR ANY SPECIAL, CONSEQUENTIAL, INCIDENTAL, OR INDIRECT DAMAGES, INCLUDING, AMONG OTHERS, DAMAGES FOR LOSS OF BUSINESS PROFITS, BUSINESS INTERRUPTION, OR LOSS OF DATA, CORRUPTION OF SYSTEMS, OR LOSS OF DOCUMENTATION, WHETHER BASED ON BREACH OF CONTRACT, TORT (INCLUDING NEGLIGENCE), PRODUCT LIABILITY, OR OTHERWISE, IN CONNECTION WITH THE USE OF THE PRODUCT, EVEN IF HIKVISION HAS BEEN ADVISED OF THE POSSIBILITY OF SUCH DAMAGES OR LOSS.
YOU ACKNOWLEDGE THAT THE NATURE OF THE INTERNET PROVIDES FOR INHERENT SECURITY RISKS, AND HIKVISION SHALL NOT TAKE ANY RESPONSIBILITIES FOR ABNORMAL OPERATION, PRIVACY LEAKAGE OR OTHER DAMAGES RESULTING FROM CYBER-ATTACK, HACKER ATTACK, VIRUS INFECTION, OR OTHER INTERNET SECURITY RISKS; HOWEVER, HIKVISION WILL PROVIDE TIMELY TECHNICAL SUPPORT IF REQUIRED.
YOU AGREE TO USE THIS PRODUCT IN COMPLIANCE WITH ALL APPLICABLE LAWS, AND YOU ARE SOLELY RESPONSIBLE FOR ENSURING THAT YOUR USE CONFORMS TO THE APPLICABLE LAW. ESPECIALLY, YOU ARE RESPONSIBLE, FOR USING THIS PRODUCT IN A MANNER THAT DOES NOT INFRINGE ON THE RIGHTS OF THIRD PARTIES, INCLUDING WITHOUT LIMITATION, RIGHTS OF PUBLICITY, INTELLECTUAL PROPERTY RIGHTS, OR DATA PROTECTION AND OTHER PRIVACY RIGHTS. YOU SHALL NOT USE THIS PRODUCT FOR ANY PROHIBITED END-USES, INCLUDING THE

DEVELOPMENT OR PRODUCTION OF WEAPONS OF MASS DESTRUCTION, THE DEVELOPMENT OR PRODUCTION OF CHEMICAL OR BIOLOGICAL WEAPONS, ANY ACTIVITIES IN THE CONTEXT RELATED TO ANY NUCLEAR EXPLOSIVE OR UNSAFE NUCLEAR FUEL-CYCLE, OR IN SUPPORT OF HUMAN RIGHTS ABUSES.
IN THE EVENT OF ANY CONFLICTS BETWEEN THIS MANUAL AND THE APPLICABLE LAW, THE LATTER PREVAILS.

Data Protection

During the use of device, personal data will be collected, stored and processed. To protect data, the development of Hikvision devices incorporates privacy by design principles. For example, for device with facial recognition features, biometrics data is stored in your device with encryption method; for fingerprint device, only fingerprint template will be saved, which is impossible to reconstruct a fingerprint image.
As data controller, you are advised to collect, store, process and transfer data in accordance with the applicable data protection laws and regulations, including without limitation, conducting security controls to safeguard personal data, such as, implementing reasonable administrative and physical security controls, conduct periodic reviews and assessments of the effectiveness of your security controls.

Regulatory Information

FCC Information

Please take attention that changes or modification not expressly approved by the party responsible for compliance could void the user's authority to operate the equipment.
FCC compliance: This equipment has been tested and found to comply with the limits for a Class B digital device, pursuant to part 15 of the FCC Rules. These limits are designed to provide reasonable protection against harmful interference in a residential installation. This equipment generates, uses and can radiate radio frequency energy and, if not installed and used in accordance with the instructions, may cause harmful interference to radio communications. However, there is no guarantee that interference will not occur in a particular installation. If this equipment does cause harmful interference to radio or television reception, which can be determined by turning the equipment off and on, the user is encouraged to try to correct the interference by one or more of the following measures:
—Reorient or relocate the receiving antenna.
—Increase the separation between the equipment and receiver.
—Connect the equipment into an outlet on a circuit different from that to which the receiver is connected.
—Consult the dealer or an experienced radio/TV technician for help
This equipment should be installed and operated with a minimum distance 20cm between the radiator and your body.
FCC Conditions
This device complies with part 15 of the FCC Rules. Operation is subject to the following two conditions:
1. This device may not cause harmful interference.
2. This device must accept any interference received, including interference that may cause undesired operation.

EU Conformity Statement

This product and - if applicable - the supplied accessories too are marked with "CE" and comply therefore with the applicable harmonized European standards listed

under the EMC Directive 2014/30/EU, RE Directive 2014/53/EU,the RoHS Directive 2011/65/EU

2012/19/EU (WEEE directive): Products marked with this symbol cannot be disposed of as unsorted municipal waste in the European Union. For proper recycling, return this product to your local supplier upon the purchase of equivalent new equipment, or dispose of it at designated collection points. For more information see: www.recyclethis.info

2006/66/EC (battery directive): This product contains a battery that cannot be disposed of as unsorted municipal waste in the European Union. See the product documentation for specific battery information. The battery is marked with this symbol, which may include lettering to indicate cadmium (Cd), lead (Pb), or mercury (Hg). For proper recycling, return the battery to your supplier or to a designated collection point. For more information see:www.recyclethis.info

Safety Instruction

These instructions are intended to ensure that user can use the product correctly to avoid danger or property loss.

The precaution measure is divided into Dangers and Cautions:

Dangers: Neglecting any of the warnings may cause serious injury or death.

Cautions: Neglecting any of the cautions may cause injury or equipment damage.

⚠	⚠
Dangers: Follow these safeguards to prevent serious injury or death.	**Cautions:** Follow these precautions to prevent potential injury or material damage.

⚠ Danger:

- In the use of the product, you must be in strict compliance with the electrical safety regulations of the nation and region.
- The equipment must be connected to an earthed mains socket-outlet.
- Shock hazard! Disconnect all power sources before maintenance.
- Do not touch the bare metal contacts of the inlets after the circuit breaker is turned off. Electricity still exists.
- ϟ indicates hazardous live and the external wiring connected to the terminals requires installation by an instructed person.
- Keep body parts away from fan blades. Disconnect the power source during servicing.
- Keep body parts away from motors. Disconnect the power source during servicing.
- To prevent possible hearing damage, do not listen at high volume levels for long periods.
- All the electronic operation should be strictly compliance with the electrical safety regulations, fire prevention regulations and other related regulations in your local region.
- Do not connect several devices to one power adapter as adapter overload may cause over-heat or fire hazard.
- Please make sure that the power has been disconnected before you wire, install or dismantle the device.
  If the top caps should be open and the device should be powered on for maintenance, make sure:
  1. Power off the fan to prevent the operator from getting injured accidentally.
  2. Do not touch bare high-voltage components.
  3. Make sure the switch's wiring sequence is correct after maintenance.
- Please make sure that the power has been disconnected before you wire, install or dismantle the device.
- When the product is installed on wall or ceiling, the device shall be firmly fixed.
- If smoke, odors or noise rise from the device, turn off the power at once and unplug the power cable, and then please contact the service center.

- Do not ingest battery, Chemical Burn Hazard.
  This product contains a coin/button cell battery. If the coin/button cell battery is swallowed, it can cause severe internal burns in just 2 hours and can lead to death.
  Keep new and used batteries away from children. If the battery compartment does not close securely, stop using the product and keep it away from children. If you think batteries might have been swallowed or placed inside any part of the body, seek immediate medical attention.
- If the product does not work properly, please contact your dealer or the nearest service center. Never attempt to disassemble the device yourself. (We shall not assume any responsibility for problems caused by unauthorized repair or maintenance.)

⚠ Cautions:

- The equipment shall not be exposed to dripping or splashing and that no objects filled with liquids, such as vases, shall be placed on the equipment.
- Ensure correct wiring of the terminals for connection to an AC mains supply.
- The equipment has been designed, when required, modified for connection to an IT power distribution system.
- + identifies the positive terminal(s) of equipment which is used with, or generates direct current. + identifies the negative terminal(s) of equipment which is used with, or generates direct current.
- No naked flame sources, such as lighted candles, should be placed on the equipment.
- This equipment is suitable for mounting on concrete or other non-combustible surface only.
- Install the equipment according to the instructions in this manual.
- To prevent injury, this equipment must be securely attached to the floor/wall in accordance with the installation instructions.
- Stainless steel may be corroded in some circumstances. You need to clean and care the device by using the stainless steel cleaner. It is suggested to clean the device every month.
- Do not drop the device or subject it to physical shock, and do not expose it to high electromagnetism radiation. Avoid the equipment installation on vibrations surface or places subject to shock (ignorance can cause equipment damage).
- Do not place the device in extremely hot (refer to the specification of the device for the detailed operating temperature), cold, dusty or damp locations, and do not expose it to high electromagnetic radiation.
- The device cover for indoor use shall be kept from rain and moisture.
- Exposing the equipment to direct sun light, low ventilation or heat source such as heater or radiator is forbidden (ignorance can cause fire danger).
- Do not aim the device at the sun or extra bright places. A blooming or smear may occur otherwise (which is not a malfunction however), and affecting the endurance of sensor at the same time.
- Please use the provided glove when open up the device cover, avoid direct contact with the device cover, because the acidic sweat of the fingers may erode the surface coating of the device cover.
- Please use a soft and dry cloth when clean inside and outside surfaces of the device cover, do not use alkaline detergents.

- Please keep all wrappers after unpack them for future use. In case of any failure occurred, you need to return the device to the factory with the original wrapper. Transportation without the original wrapper may result in damage on the device and lead to additional costs.
- Improper use or replacement of the battery may result in hazard of explosion. Replace with the same or equivalent type only. Dispose of used batteries according to the instructions provided by the battery manufacturer.
- Biometric recognition products are not completely applicable to anti-spoofing environments. If you require a higher security level, use multiple authentication modes.
- Do not stay in the lane when the device is rebooting.
- RISK OF EXPLOSION IF BATTERY IS REPLACED BY AN INCORRECT TYPE. DISPOSE OF USED BATTERIES ACCORDING TO THE INSTRUCTIONS.
- SUITABLE FOR MOUNTING ON CONCRETE OR OTHER NON-COMBUSTIBLE SURFACE ONLY.
- The instructions shall require connection of the equipment protective earthing conductor to the installation protective earthing conductor.

Available Models

Product Name	Model	Description
Swing Barrier	DS-K3B801SX-L	Left Pedestal
	DS-K3B801SX-M	Middle Pedestal
	DS-K3B801SX-R	Right Pedestal

Scan the QR code to get User Manual of Swing Barrier. Note that mobile data charges may apply if Wi-Fi is unavailable.

Contents

Chapter 1 Overview 1

1.1 Introduction 1

1.2 Main Features 2

Chapter 2 System Wiring 3

Chapter 3 Installation 8

3.1 Disassemble before Installation 8

3.2 Install Pedestals 16

Chapter 4 Disassemble before Maintenance 18

4.1 Disassemble Front and Back Components 18

4.2 Disassemble Motor Bottom Cover 21

4.3 Disassemble Side Base Cover 23

4.4 Disassemble Top Cover 27

Chapter 5 General Wiring 31

5.1 Components Introduction 31

5.2 Wiring Electric Supply 34

5.3 Wire Interconnecting Cable 35

5.4 Wire Network Switch 36

5.5 Face Recognition Terminal Power Supply Wiring 37

5.6 Terminal Description 38

5.6.1 Main Control Board Terminal Description 38

5.6.2 Sub Control Board Terminal Description 39

5.6.3 Access Control Board Terminal Description 40

5.6.4 Access Control Board Serial Port ID Description 43

5.6.5 RS-485 Wiring 46

5.6.6 RS-232 Wiring 47

5.6.7 Wiegand Wiring 48

5.6.8 Barrier Control Wiring 48
5.6.9 Alarm Output Wiring 50
5.6.10 Exit Button Wiring 50
Chapter 6 Device Settings 52
6.1 Set Study Mode 52
6.2 Pair Keyfob (Optional) 53
6.3 Initialize Device 54
6.4 Switch to RS-485/RS-232 Mode 55
6.5 Switch Relay Output Mode (NO/NC) 56
6.5.1 Barrier Control Relay Output Mode 56
6.5.2 Alarm Relay Output Mode (NO/NC) 57
Chapter 7 Activation 58
7.1 Activate via SADP 58
7.2 Activate Device via Client Software 59
Appendix A. Tips for Scanning Fingerprint 61
Appendix B. DIP Switch 63
B.1 DIP Switch Description 63
B.2 DIP Switch Corresponded Functions 63
Appendix C. Event and Alarm Type 66
Appendix D. Table of Audio Index Related Content 67
Appendix E. Error Code Description 68
Appendix F. Communication Matrix and Device Command 70

Chapter 1 Overview

1.1 Introduction

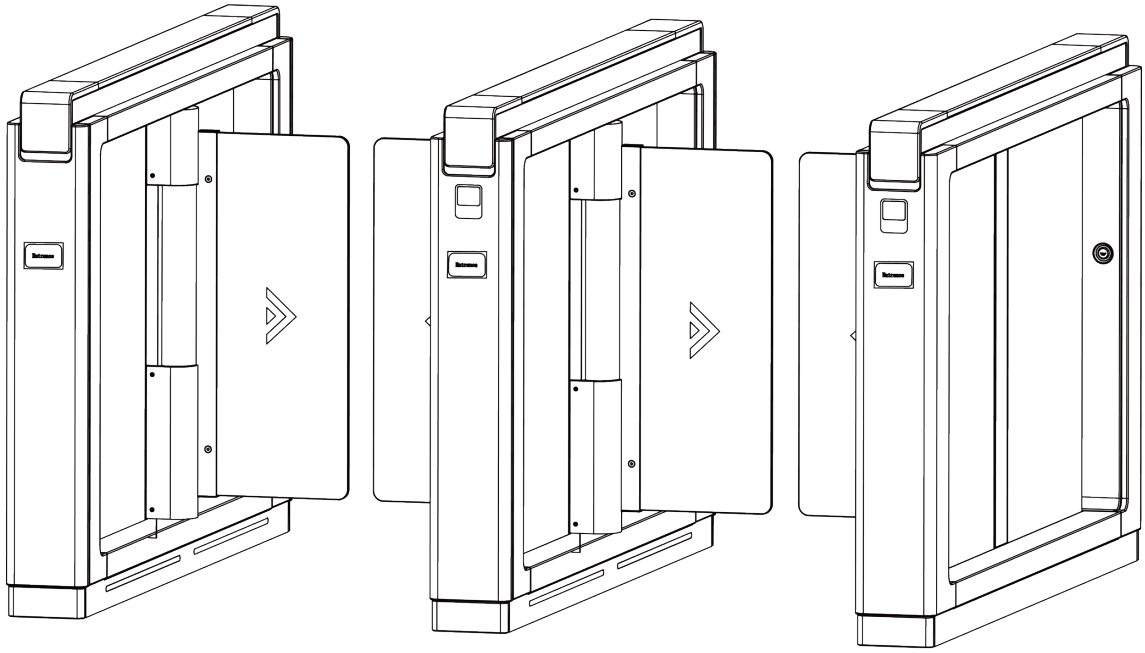

The swing barrier with two barriers and 24 IR lights is designed to detect unauthorized entrance or exit. By adopting the swing barrier integrated with the access control system, person should authenticate to pass through the lane via swiping IC or ID card, scanning QR code, etc. It is widely used in attractions, stadiums, construction sites, residences, etc.

1.2 Main Features

- 32-bit high-speed processor
- TCP/IP network communication
  The communication data is specially encrypted to relieve the concern of privacy leak.
- Permissions validation and anti-tailgating
- Remaining open/closed mode selectable
- Bidirectional (Entering/Exiting) lane
  The barrier opening and closing speed can be configured according to the visitor flow.
- The barrier will be locked or stop working when people are nipped
- Anti-forced-accessing
  The barrier will be locked automatically without open-barrier signal.
- Self-detection, Self-diagnostics, and automatic alarm
- Audible and visual alarm will be triggered when detecting intrusion, tailgating, reverse passing, and climbing over barrier
- IP conflict detection
- Remote control and management
- Online/offline operation
- LED indicates the entrance/exit and light bar indicates passing status
- Barrier remains open when powered down
- Fire alarm passing
  When the fire alarm is triggered, the barrier will be open automatically for emergency evacuation
- Valid passing duration settings
  System will cancel the passing permission if a person does not pass through the lane within the valid passing duration
- Opens/Closes barrier according to the schedule template

Chapter 2 System Wiring

The preparation before installation and wiring.

Steps

1. Draw a central line on the installation surface of the left or right pedestal.
2. Draw other parallel lines for installing the other pedestals.

   Note

   The distance between the nearest two line is L+100 mm. L represents the lane width.

3. Slotting on the installation surface and dig installation holes according to the hole position diagram.

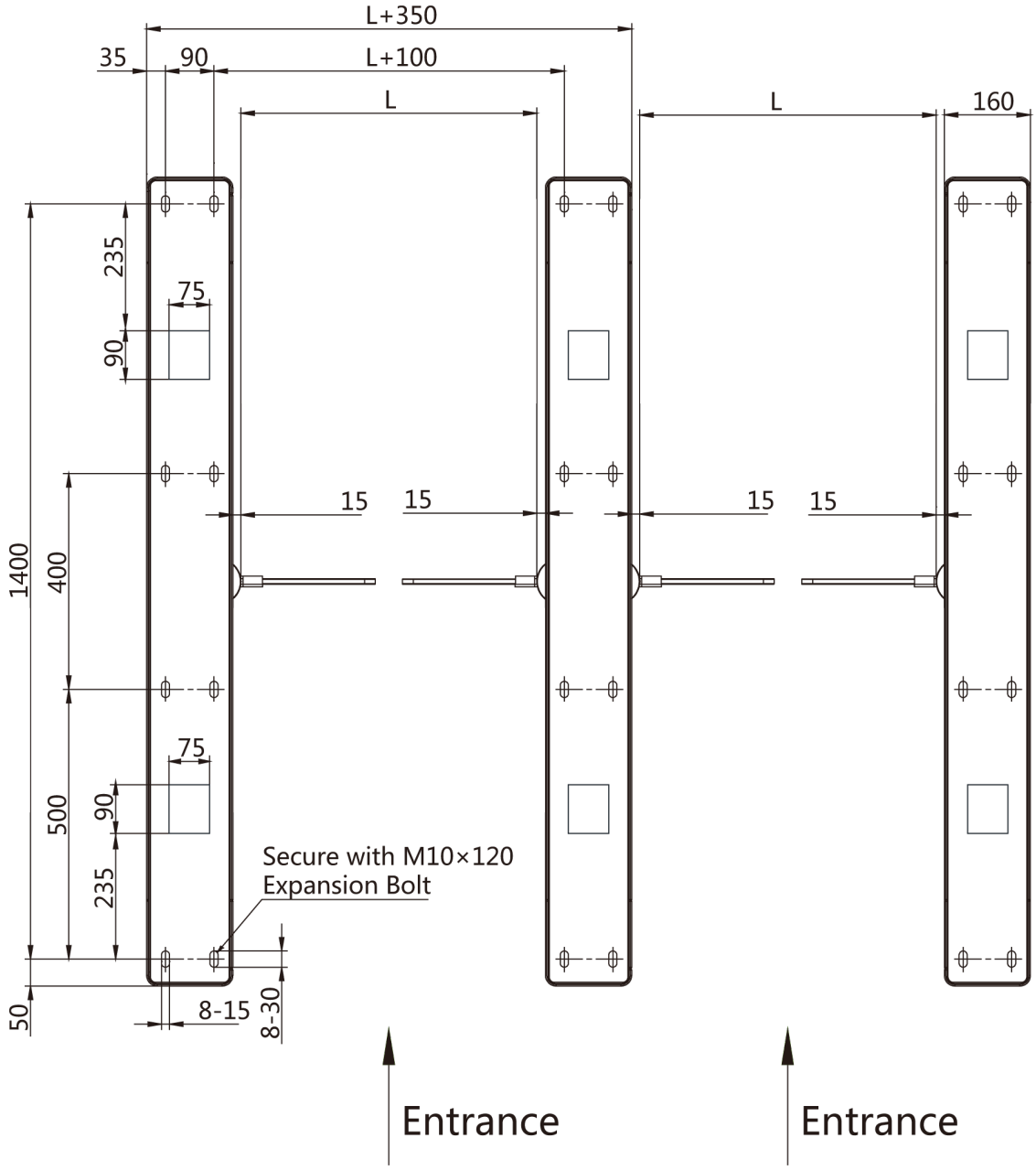

Figure 2-1 Hole Position Diagram

4. Bury cables. Each lane buries 1 network cable and 1 high voltage cable. For details, see the system wiring diagram below.

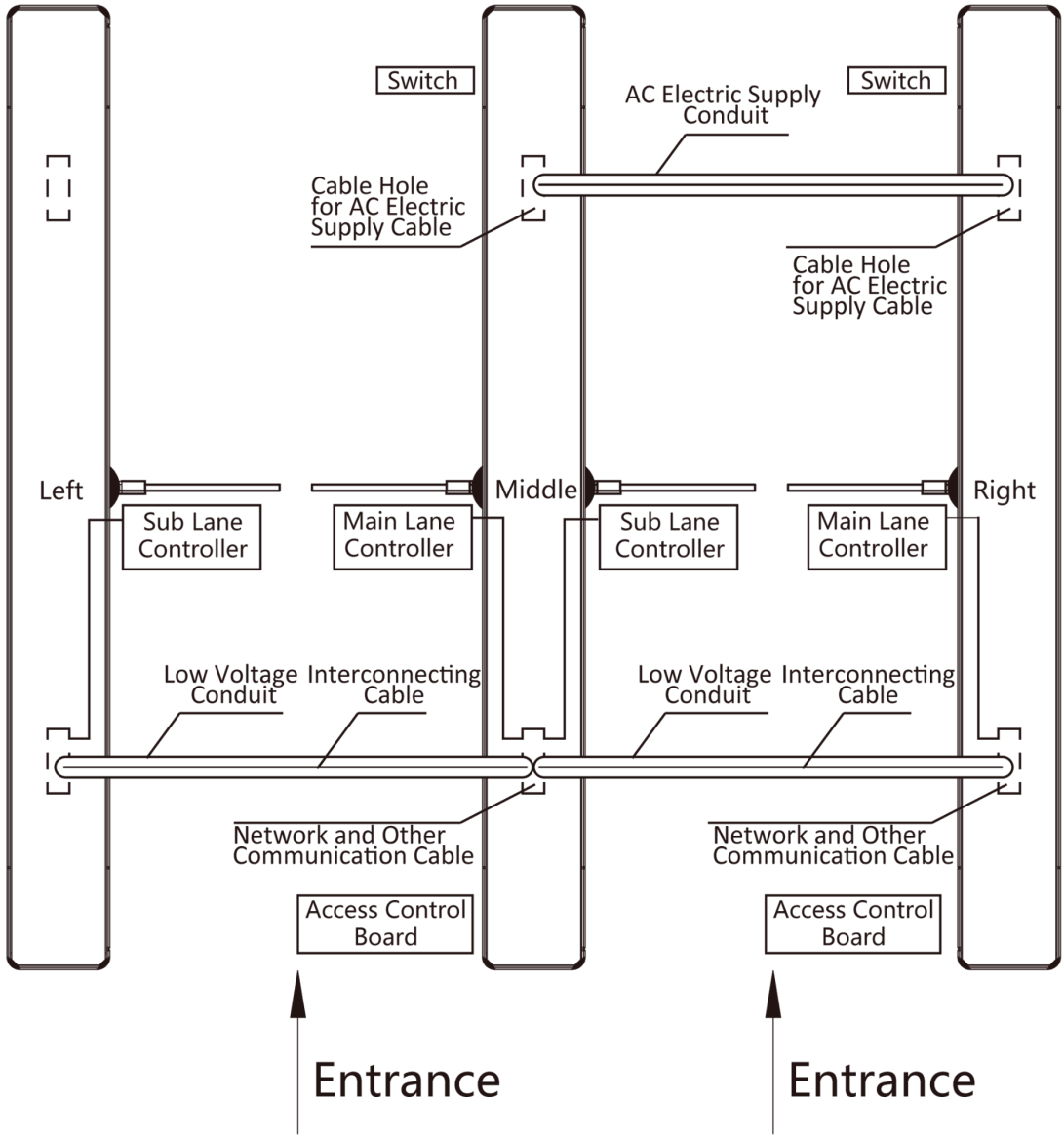

Figure 2-2 System Wiring Diagram (General Wiring)

Note

- The supplied interconnecting cable length is 5.5 m.
- The suggested inner diameter of the low voltage conduit is larger than 30 mm.
- If you want to bury both of the AC power cord and the low voltage cable at the entrance, the two cables should be in separated conduits to avoid interference.
- If more peripherals are required to connect, you should increase the conduit diameter or bury another conduit for the external cables.

- The external AC power cord should be double-insulated.
- The network cable must be CAT5e or the network cable has better performance. And the suggested network cable length should be less than 100 m.

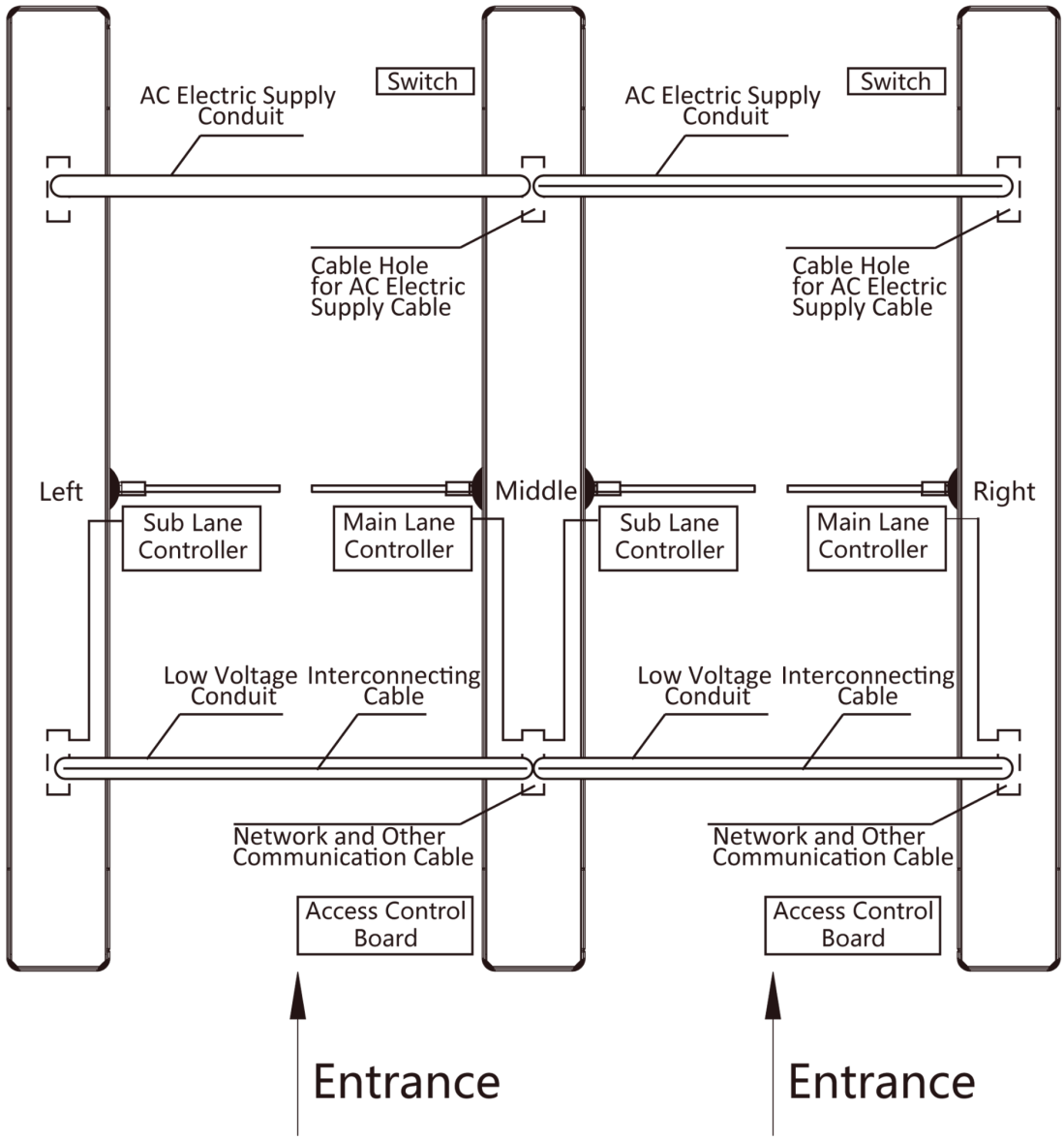

Figure 2-3 Wire Face Recognition Terminal

Note

- The supplied interconnecting cable length is 5.5 m.
- The left pedestal and the middle pedestal should bury interconnecting cables for connecting the face recognition terminal.

- The face recognition terminal installed on the left pedestal will gain power from the 12 V power supply, which should connect to the electric supply.
- The suggested inner diameter of the low voltage conduit is larger than 30 mm.
- If you want to bury both of the AC power cord and the low voltage cable at the entrance, the two cables should be in separated conduits to avoid interference.
- If more peripherals are required to connect, you should increase the conduit diameter or bury another conduit for the external cables.
- The external AC power cord should be double-insulated.
- The network cable must be CAT5e or the network cable has better performance. And the suggested network cable length should be less than 100 m.

Chapter 3 Installation

3.1 Disassemble before Installation

Before installation, you should disassemble the pedestal and remove some screws.

Before You Start

- Keep the disassembled components and screws.
- You should prepare the following tools to disassemble the pedestal: 1. Pedestal Key (supplied); 2. Allen Wrench (2.5 mm); 3. Allen Wrench (3 mm); 4. Allen Wrench (4 mm).

Steps

1. Use the pedestal key to open the front and back components.

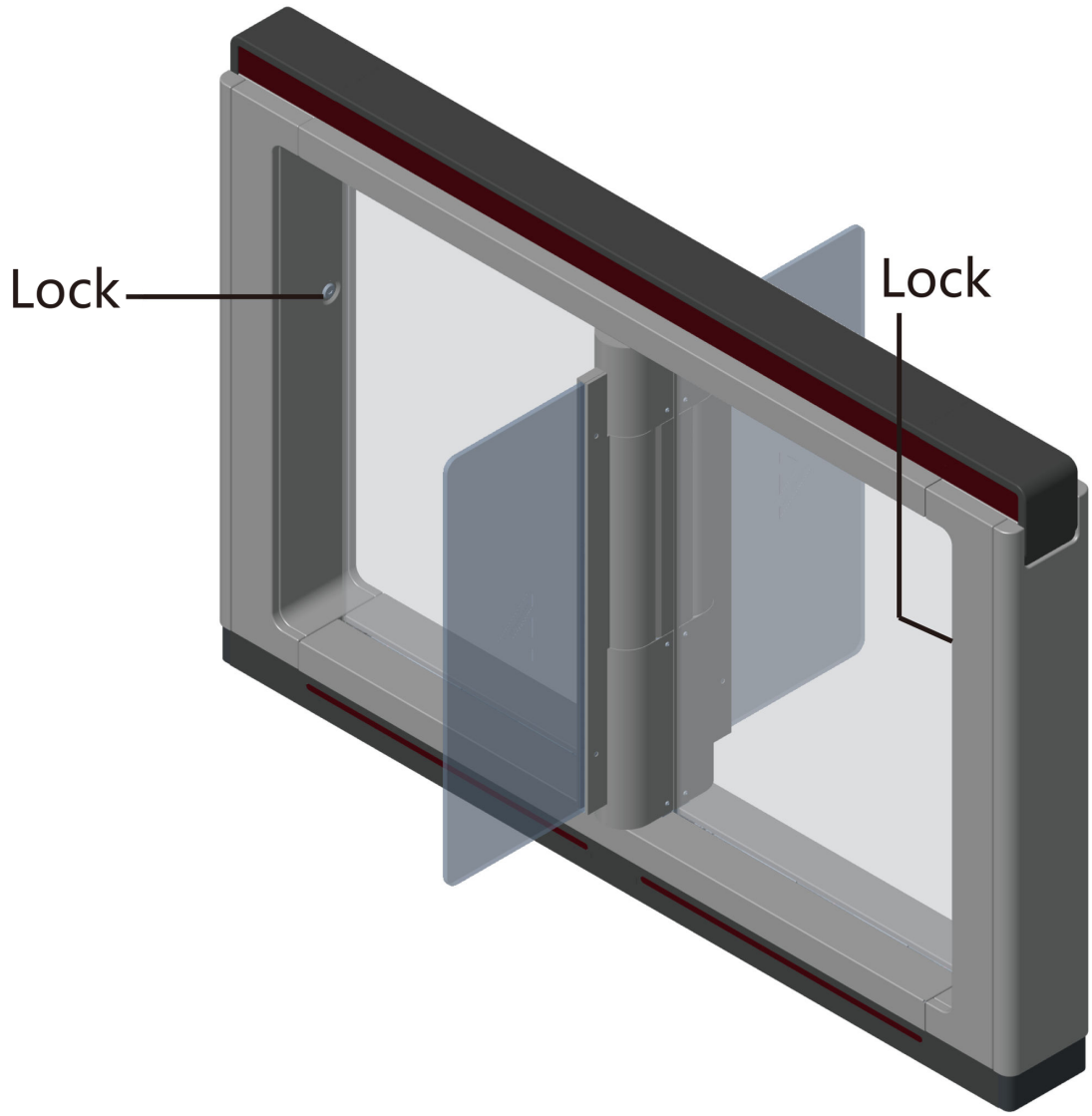

Figure 3-1 Lock Position

2. Use the Allen wretch (4 mm) to loosen the 2 screws (M5 × 25) at the top of the device.

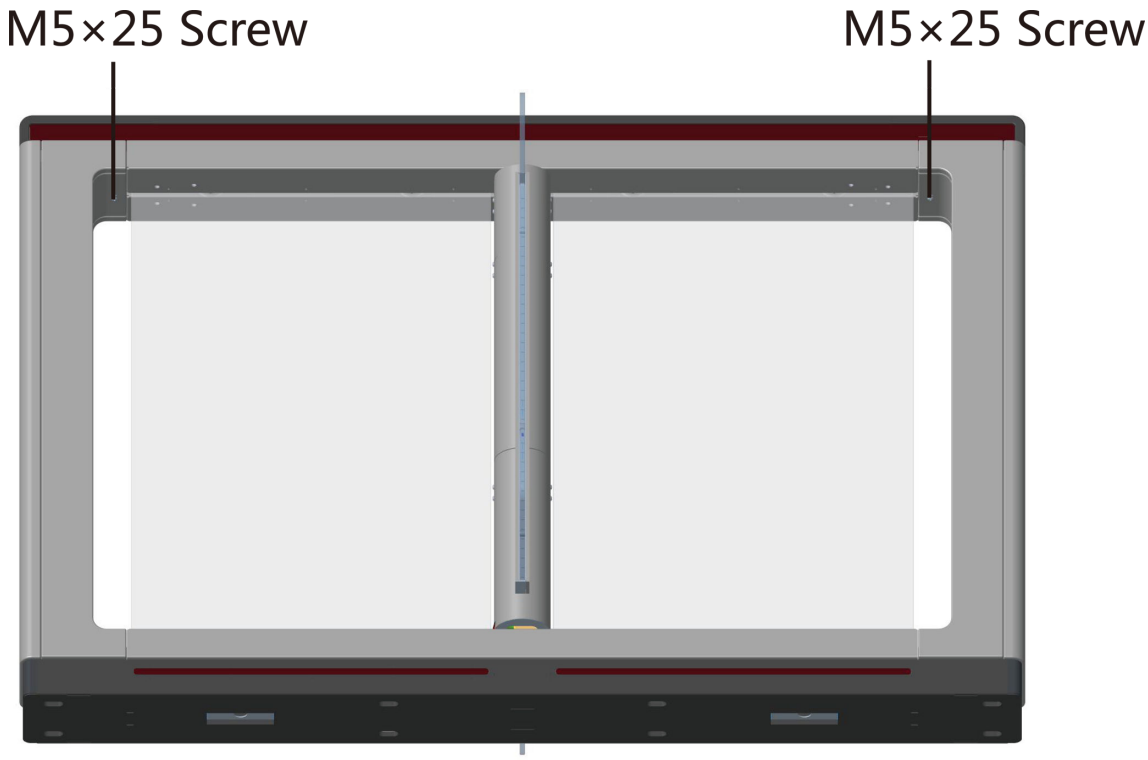

Figure 3-2 M5×25 Screws

3. Remove the components along the arrow direction carefully.

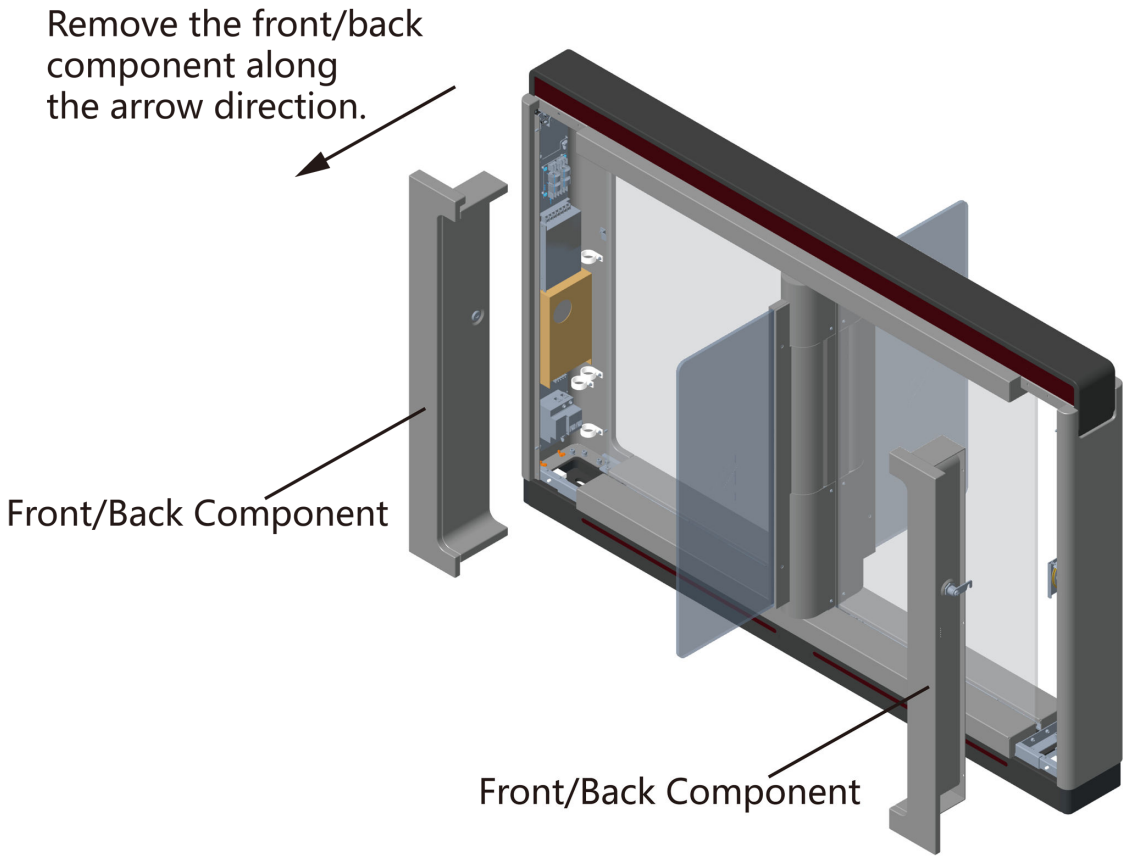

Figure 3-3 Remove Components

4. Loosen the wing bolt (M4 × 10) at the front and back of the pedestal, and remove the front and back base covers along the arrow direction.

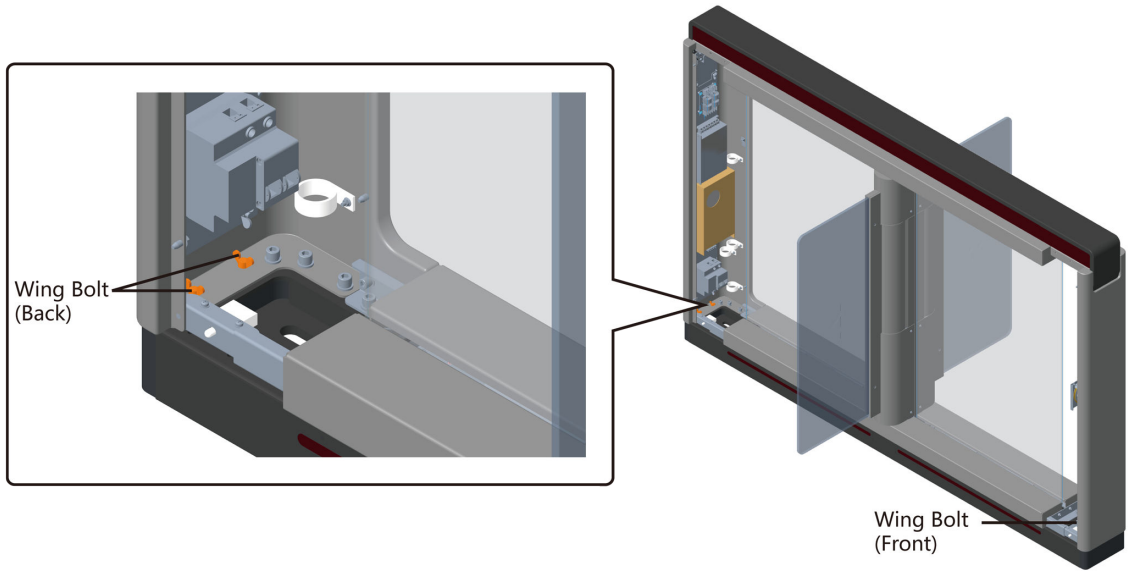

Figure 3-4 Loosen Wing Bolt

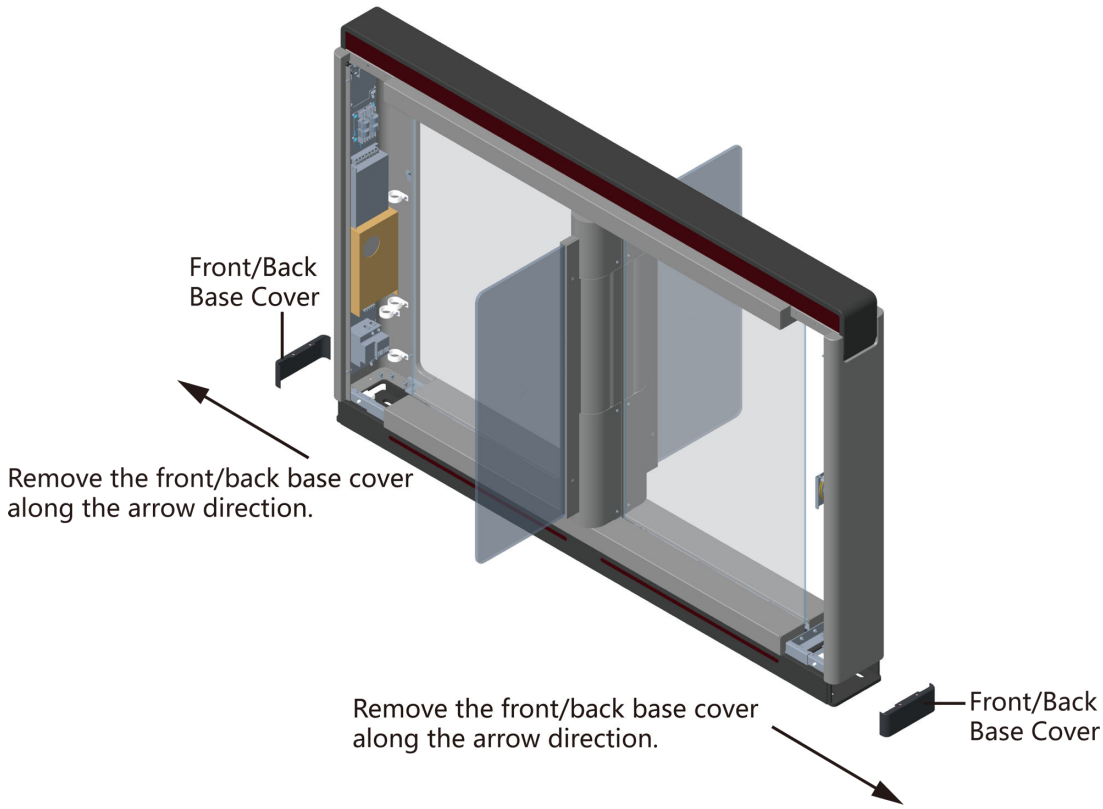

Figure 3-5 Remove Base Cover

You can start installing the expansion screws to secure the device on the installation surface.

5. Remove the motor bottom cover.

1) Pull or push the barrier to the closed position.
2) Use the Allen wretch (2.5 mm) to loosen the 4 screws (M4 × 8) on the motor bottom cover.

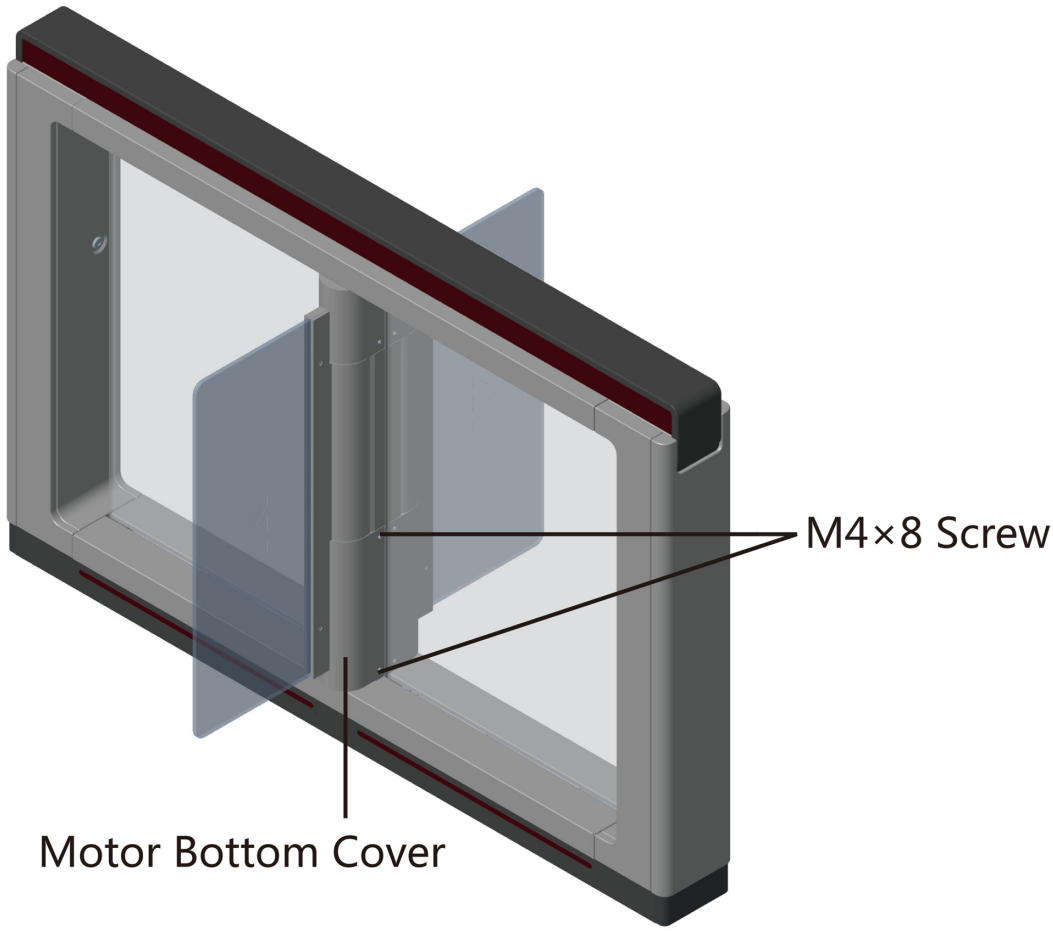

Figure 3-6 M4×8 Screw

3) Pull or push the barrier to the open position, and remove the motor bottom cover.

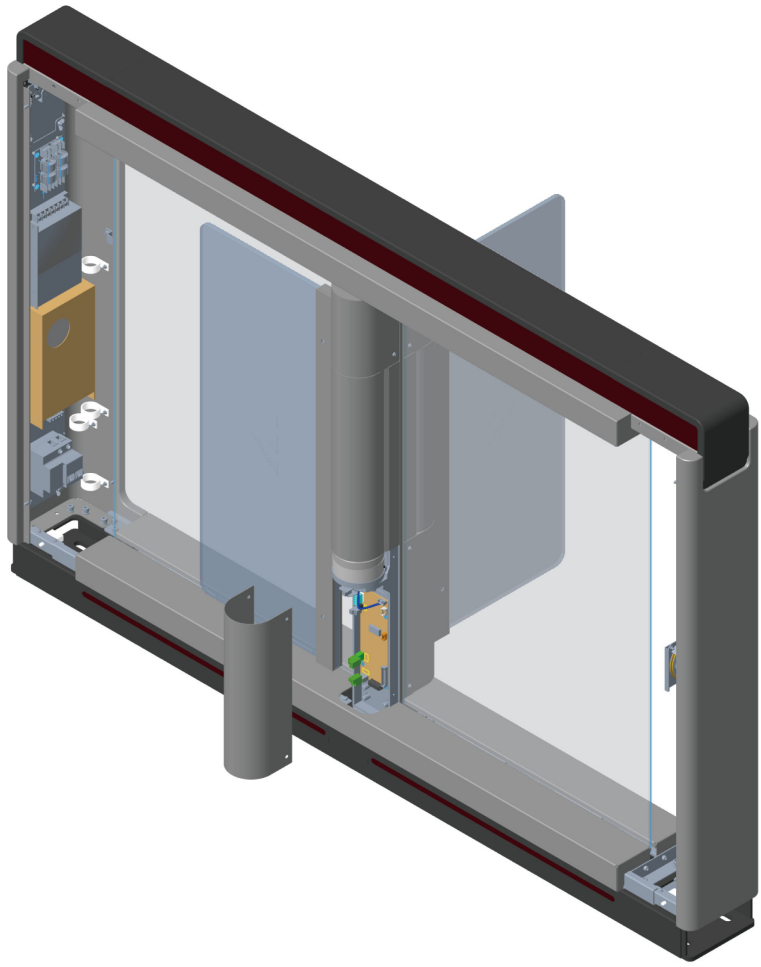

Figure 3-7 Remove Motor Bottom Cover

Note

If dissembling the middle pedestal, you should dissemble two motor bottom covers.

6. Use the Allen wretch (4 mm) to loosen the 2 screws (M5 × 12) at the front or back of the pedestal base and remove the side base cover slowly.

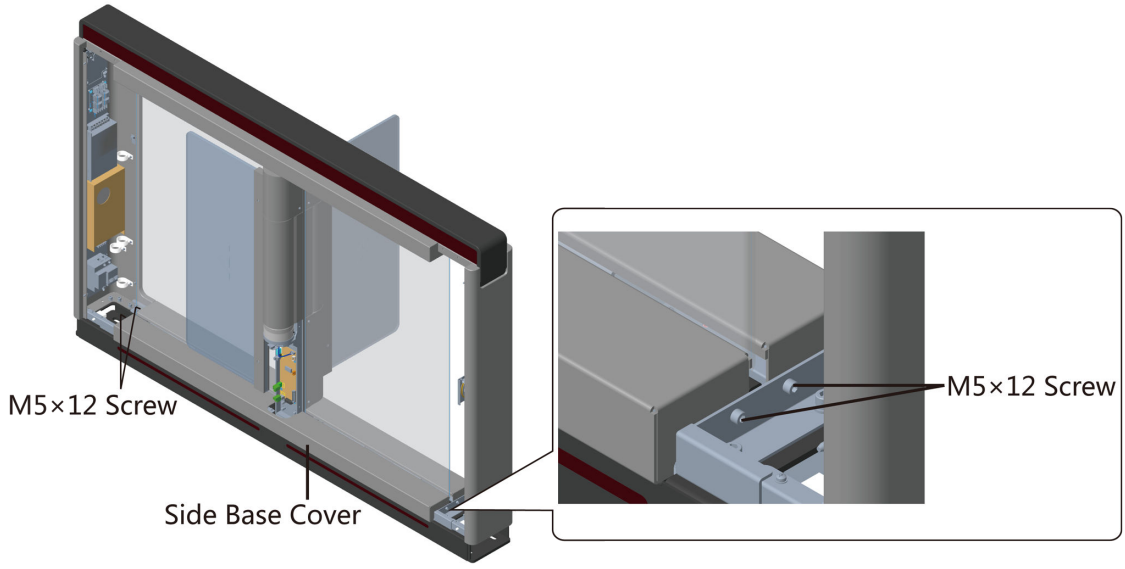

Figure 3-8 Remove Side Base Cover

Note

If dissembling the middle pedestal, you should dissemble two side base covers.

7. Disassemble the two protective sheets at the bottom for wiring, and you can start wiring the interconnecting cable.

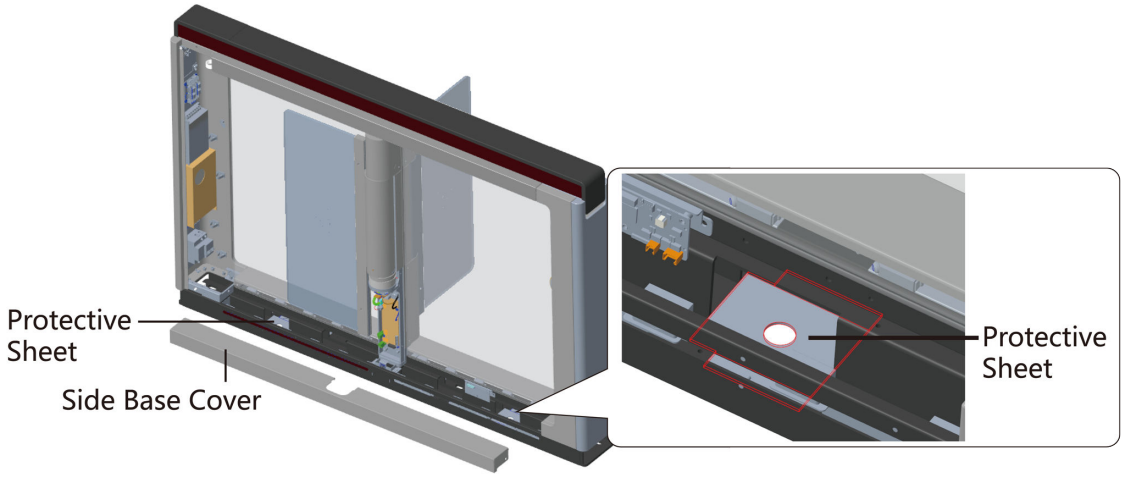

Figure 3-9 Disassemble Two Protective Sheets

3.2 Install Pedestals

Before You Start

Prepare for the installation tools, check the device and the accessories, and clear the installation base.

Steps

Note

- The device should be installed on the concrete surface or other non-flammable surfaces.
- The dimension is as follows.

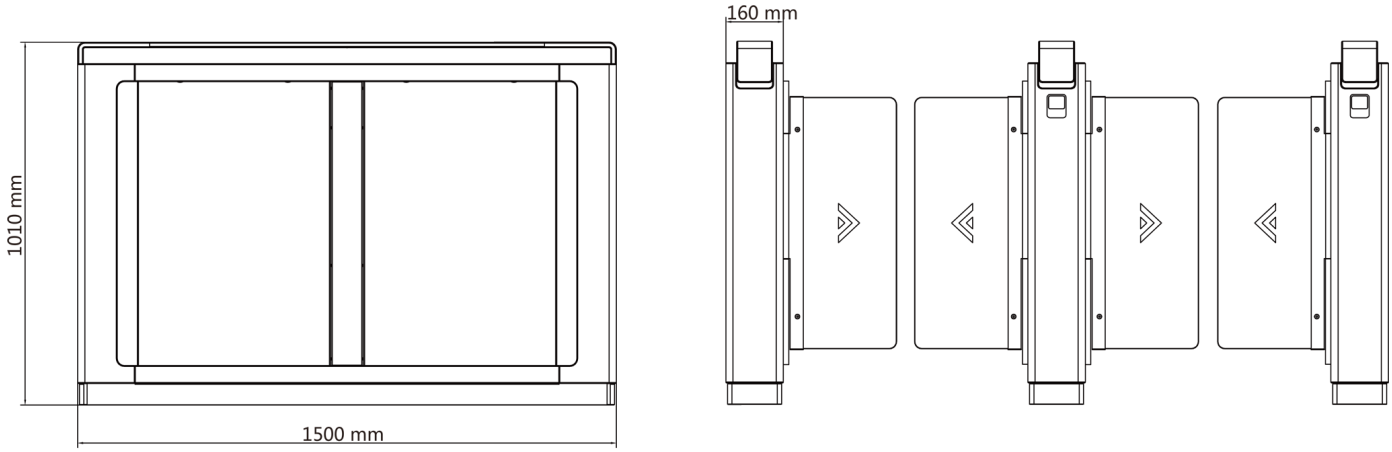

Figure 3-10 Dimension

1. Prepare for the installation tools, check the components, and prepare for the installation base.
2. Drill holes on the ground according to the installation holes on the pedestals and insert the expansion sleeves.
3. According to the entrance and exit marks on the pedestals, move the pedestals to the corresponded positions.

   Note

   Make sure the installation holes on the pedestals and the base are aligned with each other.
4. Secure the pedestals with expansion bolts.

   Note

   - Do not immerse the pedestal in the water. In special circumstances, the immersed height should be no more than 150 mm.
   - The installation footprint is as follows:

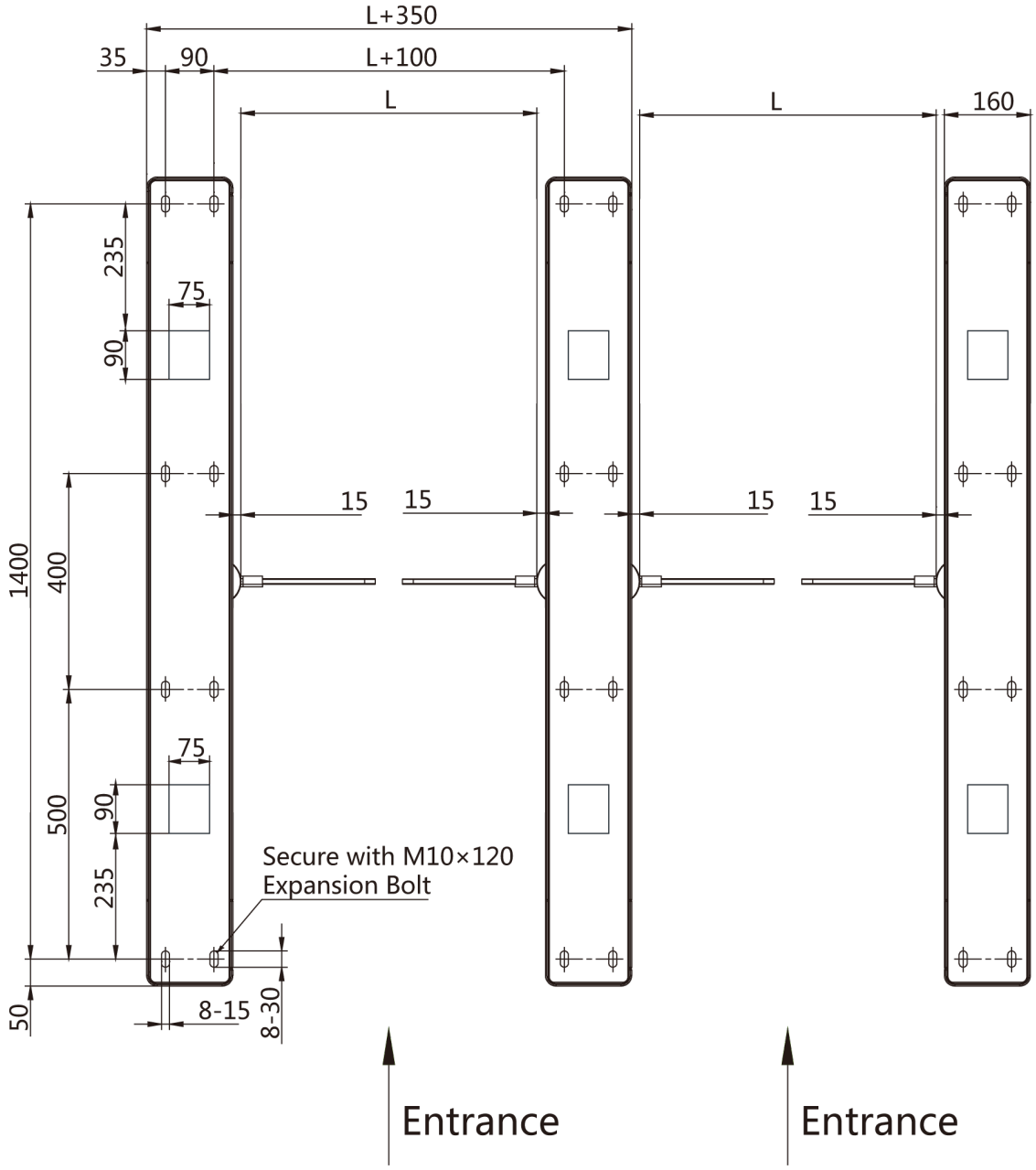

Figure 3-11 Installation Footprint

5. After installation, assemble the components and screws back to the pedestal in reverse order (except for protective sheets).

Chapter 4 Disassemble before Maintenance

Before maintaining the inner components, you should disassemble the pedestal and remove some screws.

Note

- Keep the disassembled components and screws organized.
- You should prepare the following tools to disassemble the pedestal: 1. Pedestal Key (supplied); 2. Allen Wrench (2.5 mm); 3. Allen Wrench (3 mm); 4. Allen Wrench (4 mm).

4.1 Disassemble Front and Back Components

After disassembling the front and back components, you can maintain the front and back parts of the pedestal.

Steps

1. Use the pedestal key to open the front and back components.

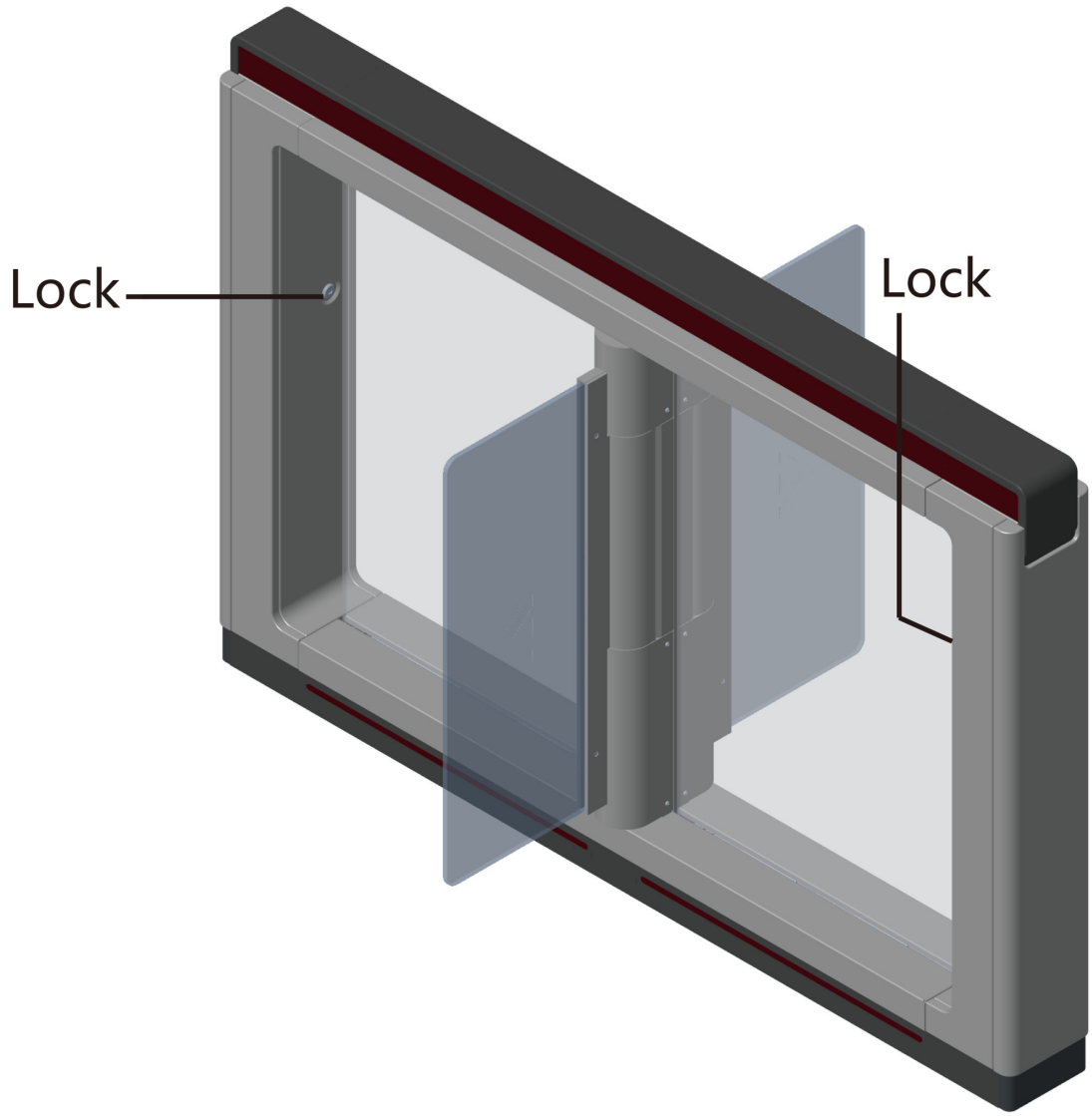

Figure 4-1 Lock Position

2. Use the Allen wretch (4 mm) to loosen the 2 screws (M5 × 25) at the top of the device

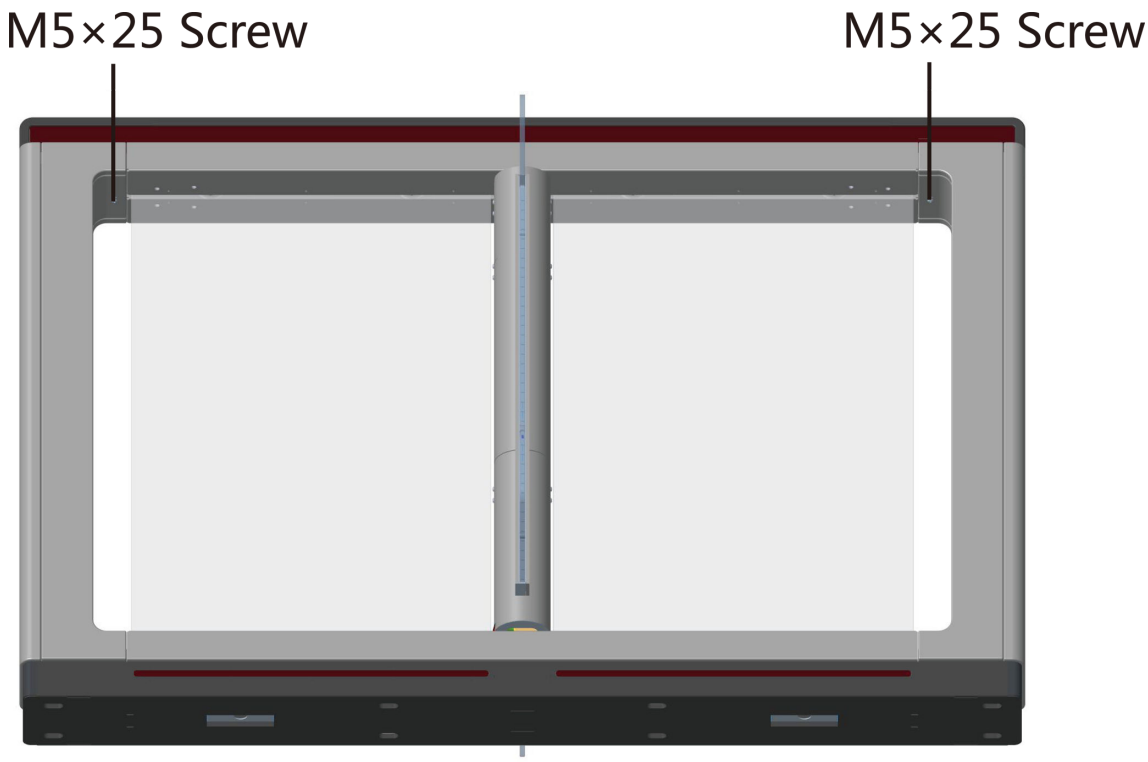

Figure 4-2 M5×25 Screws Position

3. Remove the components along the arrow direction carefully.

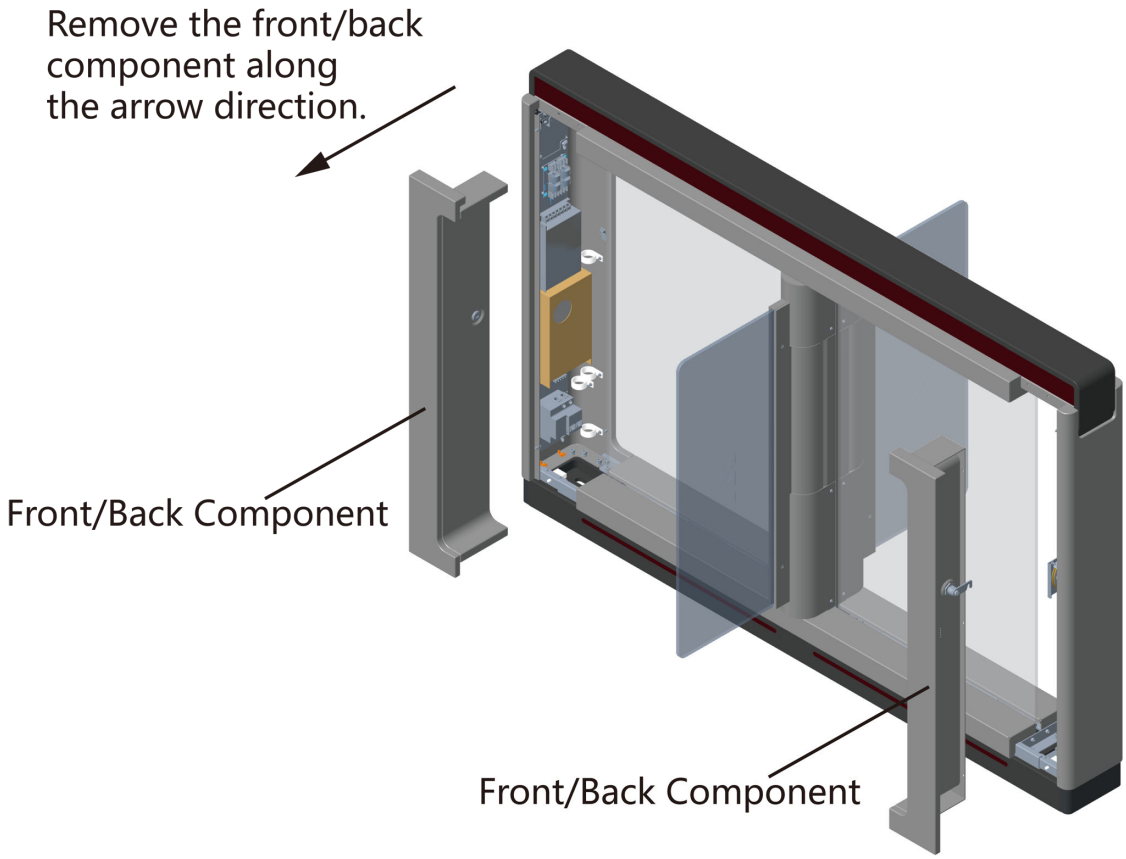

Figure 4-3 Remove Components

4.2 Disassemble Motor Bottom Cover

After disassembling the motor bottom cover, you can maintain the lane control board and the barrier position control board.

Steps

1. Pull or push the barrier to the closed position.
2. Use the Allen wretch (2.5 mm) to loosen the 4 screws (M4 × 8) on the motor bottom cover.

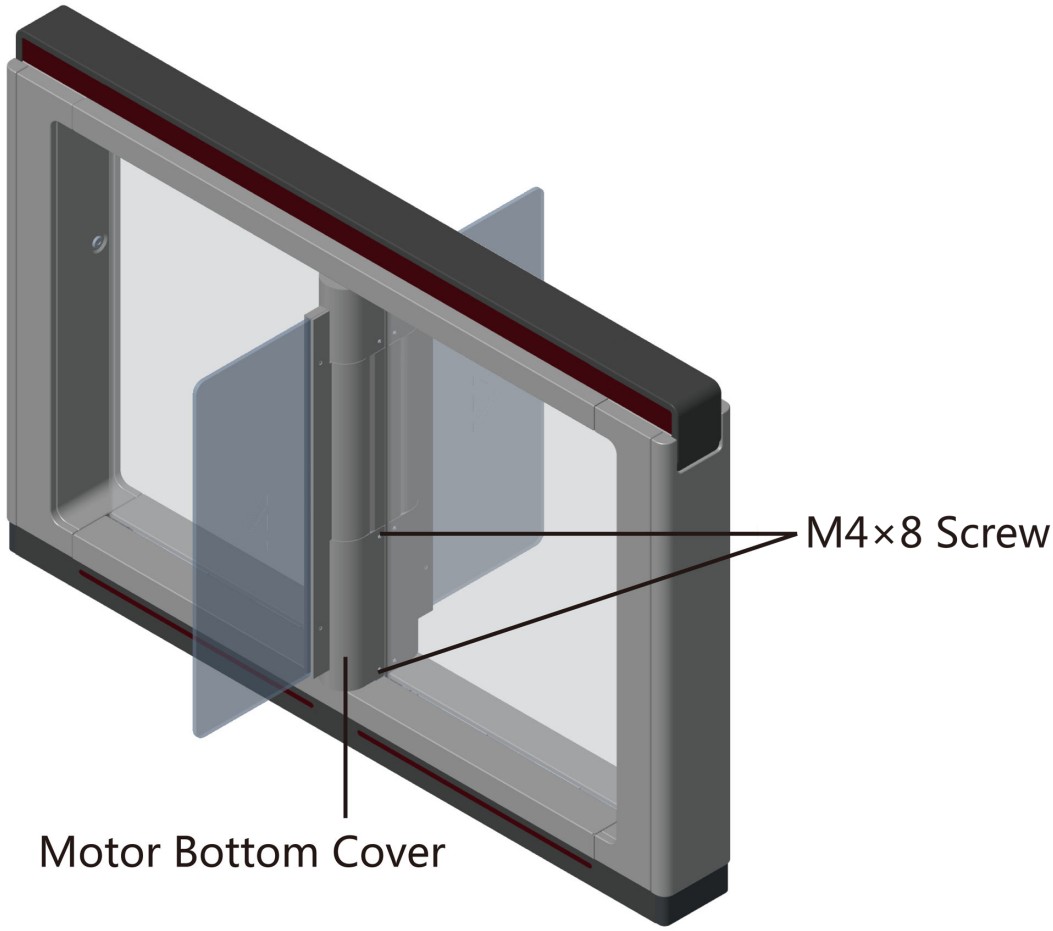

Figure 4-4 M4×8 Screws Position

3. Pull or push the barrier to the open position, and remove the motor bottom cover.

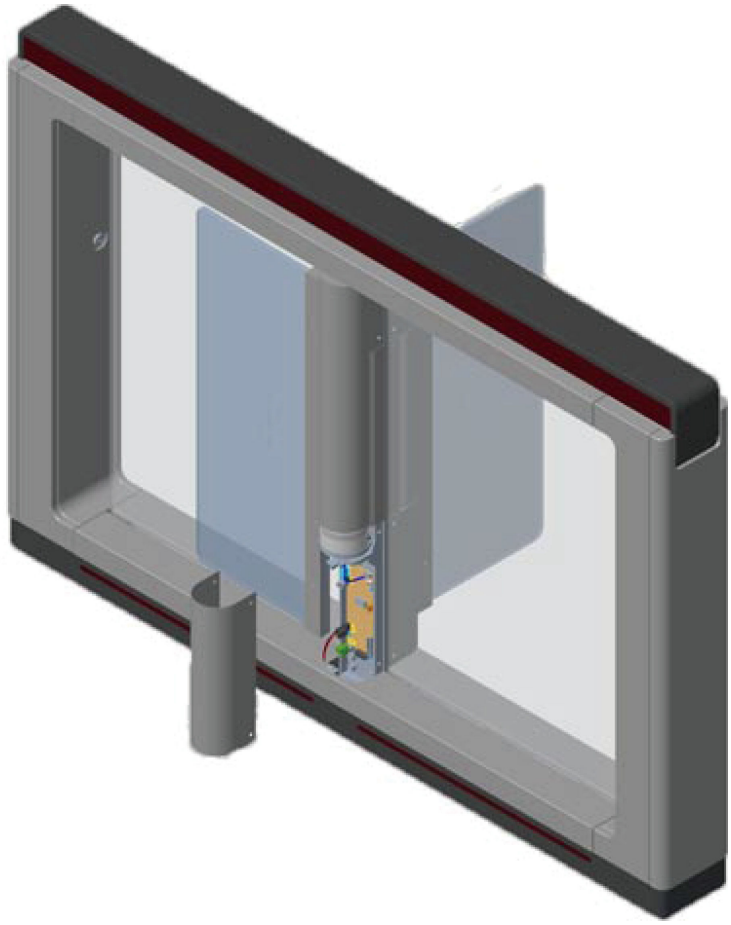

Figure 4-5 Remove Bottom Cover

Note

If dissembling the middle pedestal, you should dissemble two motor bottom covers.

4.3 Disassemble Side Base Cover

After disassembling the side base cover, you can maintain the IR sending/receiving board.

Steps

1. Use the pedestal key to open the front and back components.

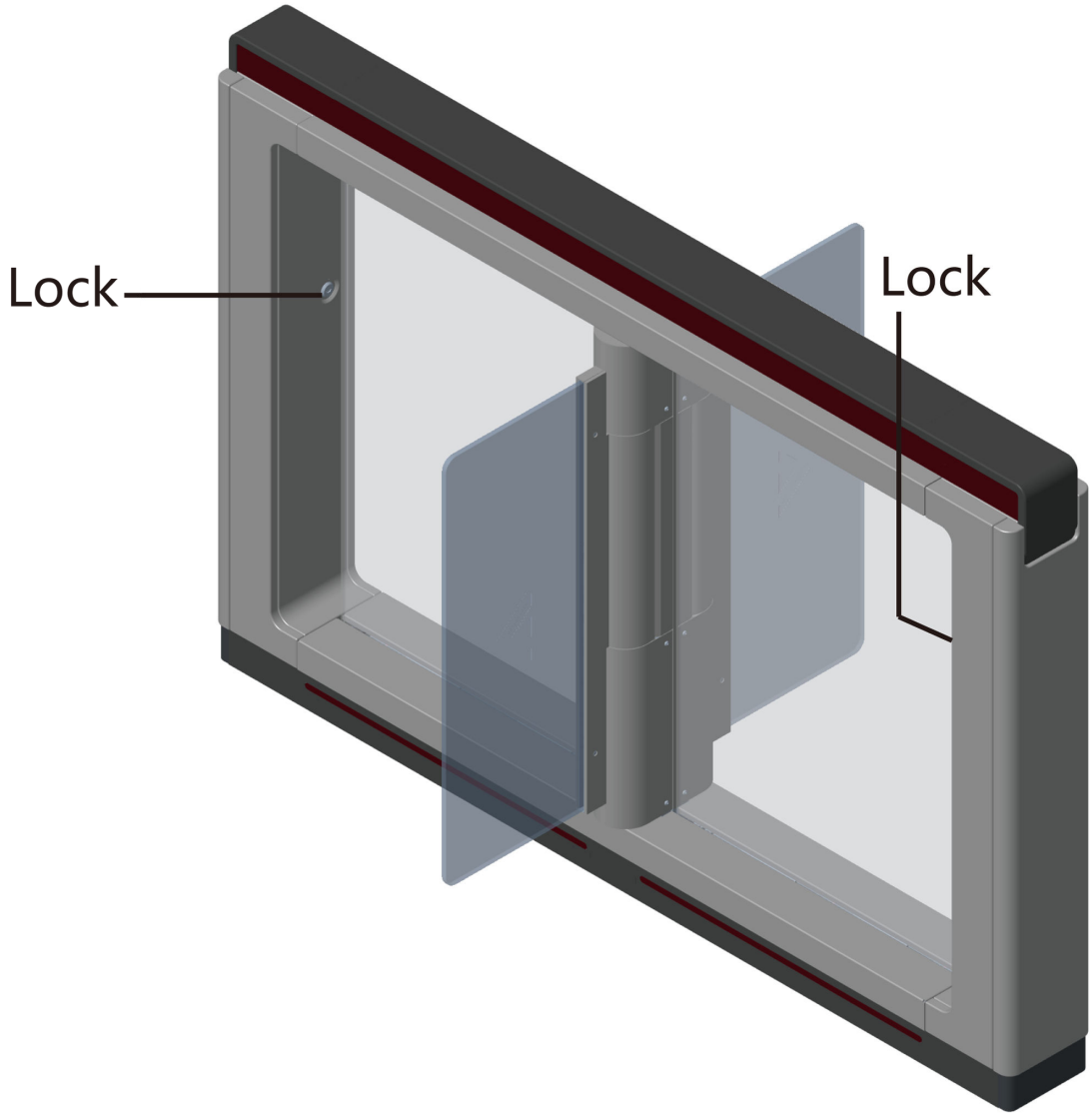

Figure 4-6 Lock Position

2. Use the Allen wretch (4 mm) to loosen the 2 screws (M5 × 25) at the top of the device.

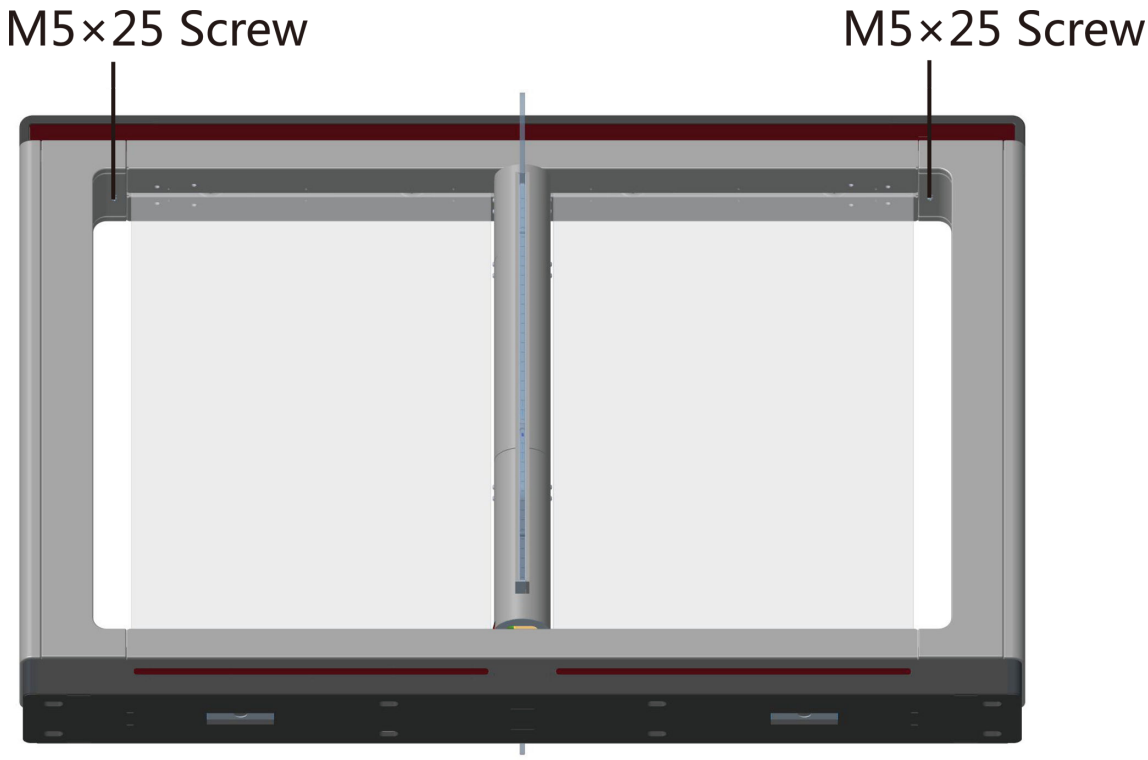

Figure 4-7 M5×25 Screws Position

3. Remove the components along the arrow direction carefully.

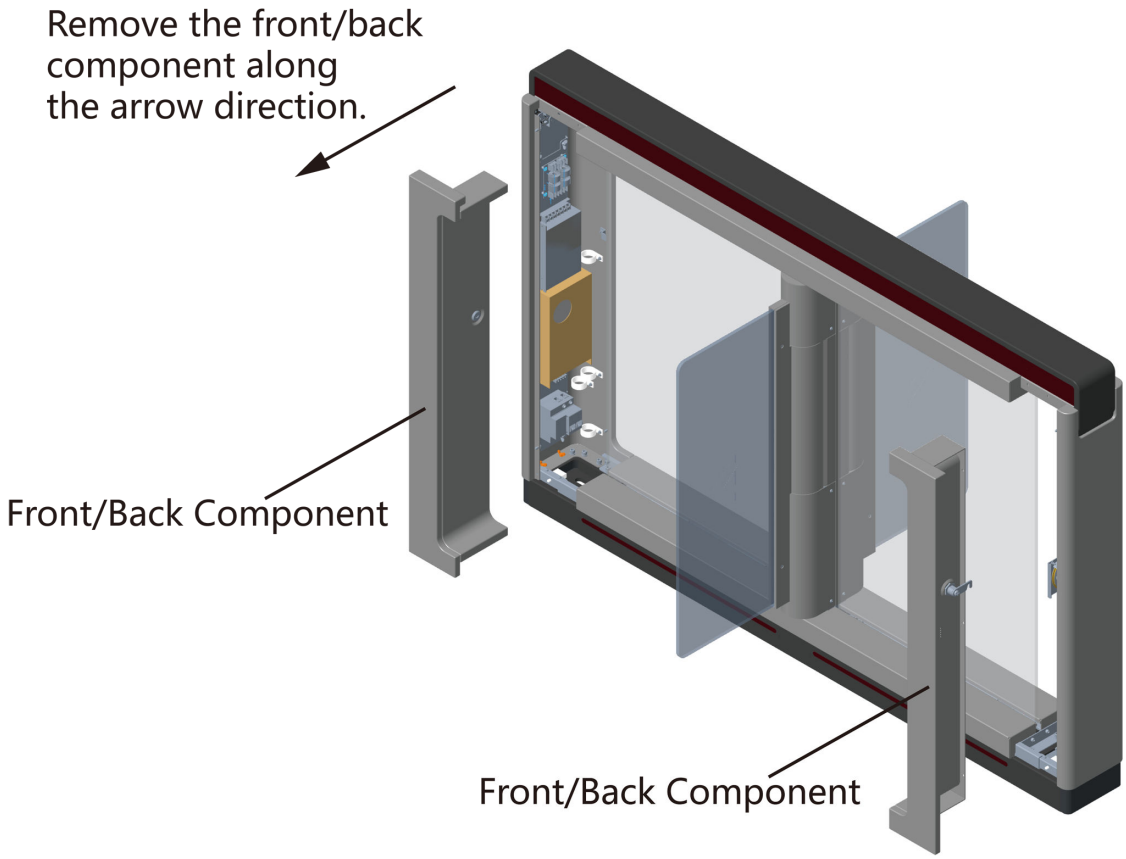

Figure 4-8 Remove Components

4. Use the Allen wretch (4 mm) to loosen the 2 screws (M5 × 12) at the front or back of the pedestal base and remove the side base cover slowly.

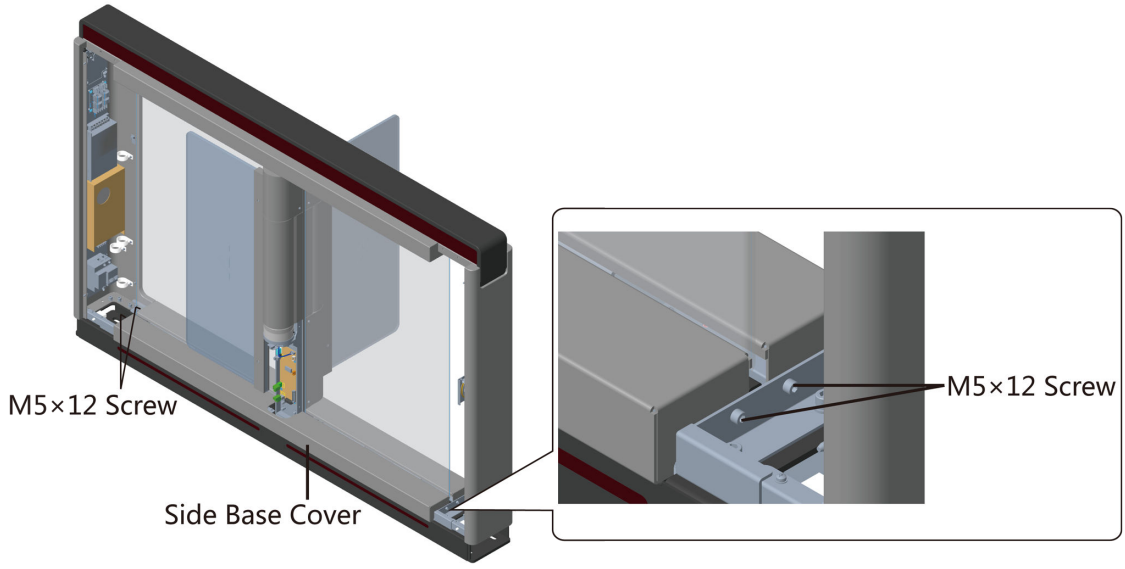

Figure 4-9 Remove Side Base Cover

Note

If dissembling the middle pedestal, you should dissemble two side base covers.

4.4 Disassemble Top Cover

After disassembling the top cover, you can maintain the components at the top of the pedestal, the IR sending/receiving board and the IR adaptor for instance.

Steps

1. Use the Allen wretch (2.5 mm) to loosen the 4 captive panel screws at the top of the pedestal.

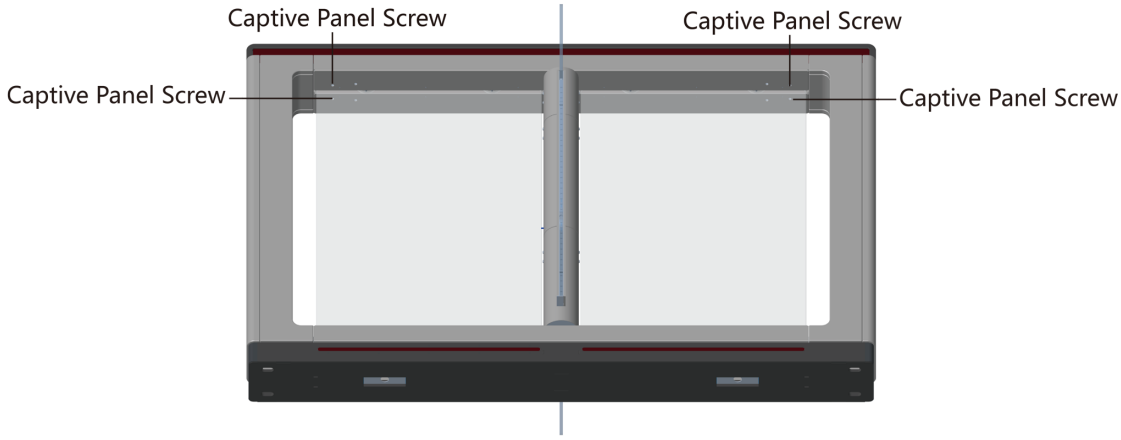

Figure 4-10 Loosen Captive Panel Screw

2. Move the front and back top covers along the arrow 1's direction for about 3 cm, and move them upwards to remove the front and back top covers.

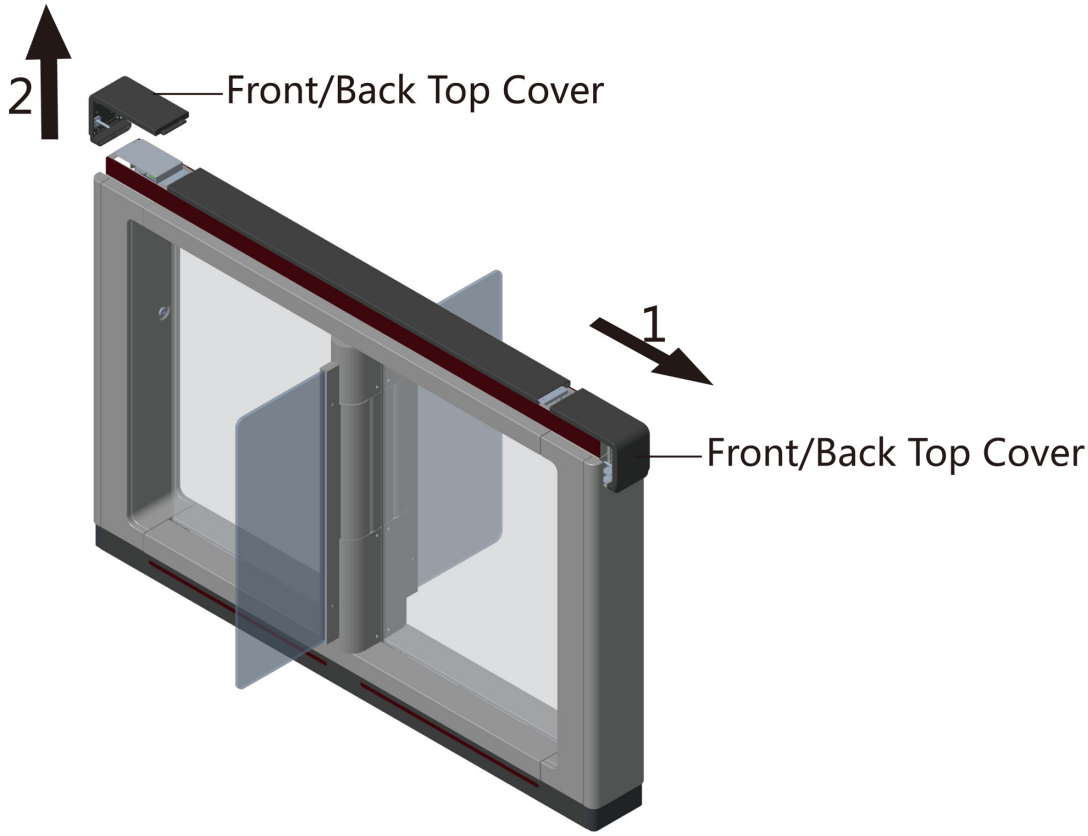

Figure 4-11 Remove Front and Back Top Cover

3. **Optional:** If you should install the fingerprint modules in the pedestal, you should use the key to open and remove the front and back components, and cut off the fingerprint modules' power.
4. Use the Allen wrench (2.5 mm) to loosen the 2 captive panel screws displayed in the picture below.

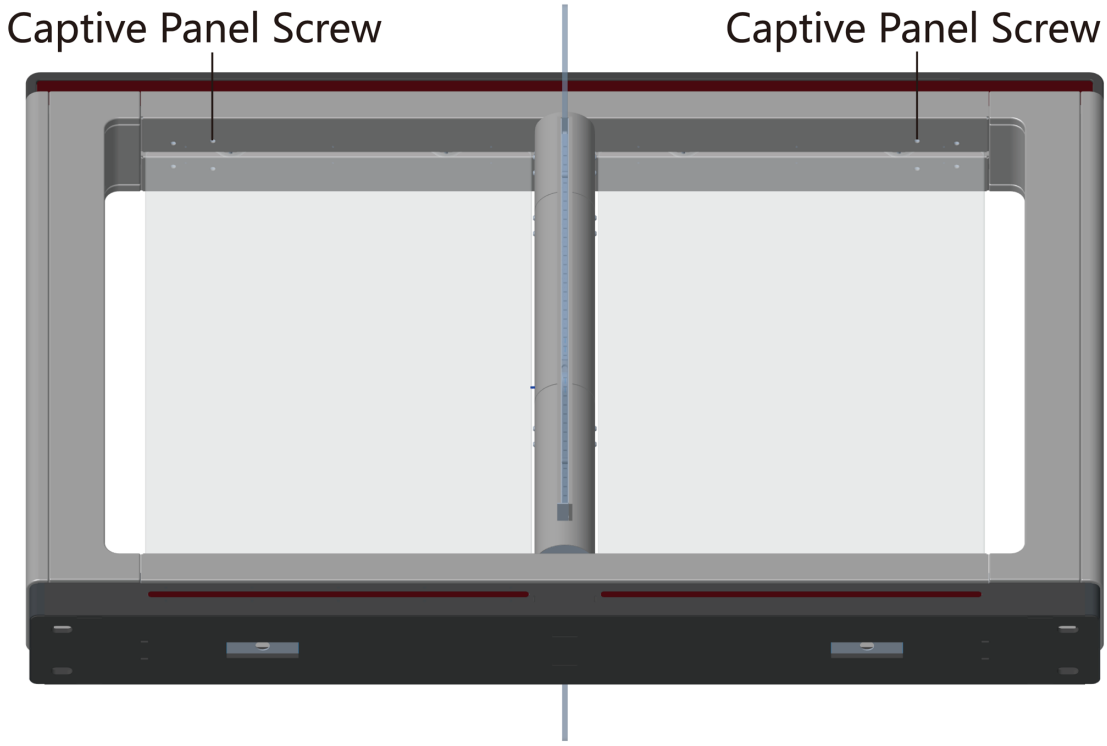

Figure 4-12 Top Captive Panel Screws

5. Remove the top cover along the arrow's direction.

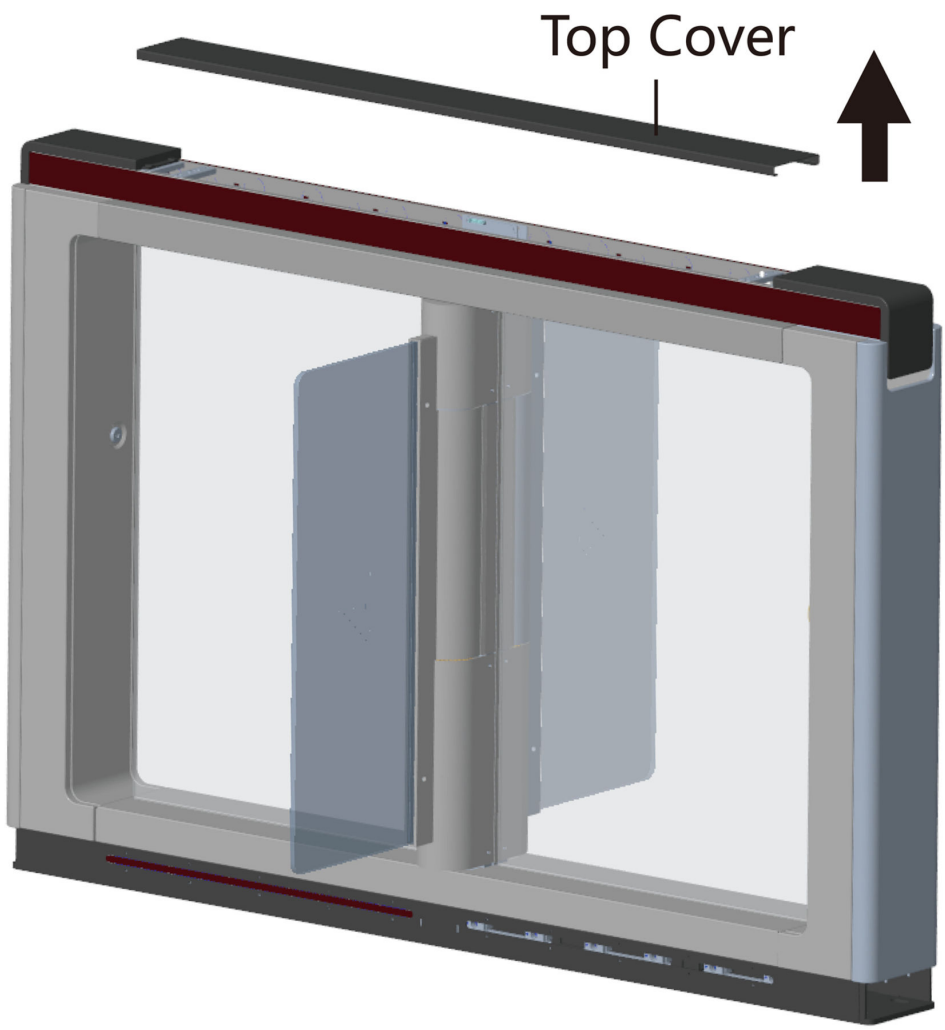

Figure 4-13 Remove Top Cover

Chapter 5 General Wiring

5.1 Components Introduction

By default, basic components of the turnstile are connected well. The pedestals can communicate by wiring the interconnecting cables. And the turnstile supports wiring the AC electric supply for the whole system's power supply.

Note

The voltage fluctuation of the electric supply is between 100 VAC and 220 VAC, 50 to 60 Hz.

The picture displayed below describes each component's position on the turnstile.

Note

The diagram is for reference only.

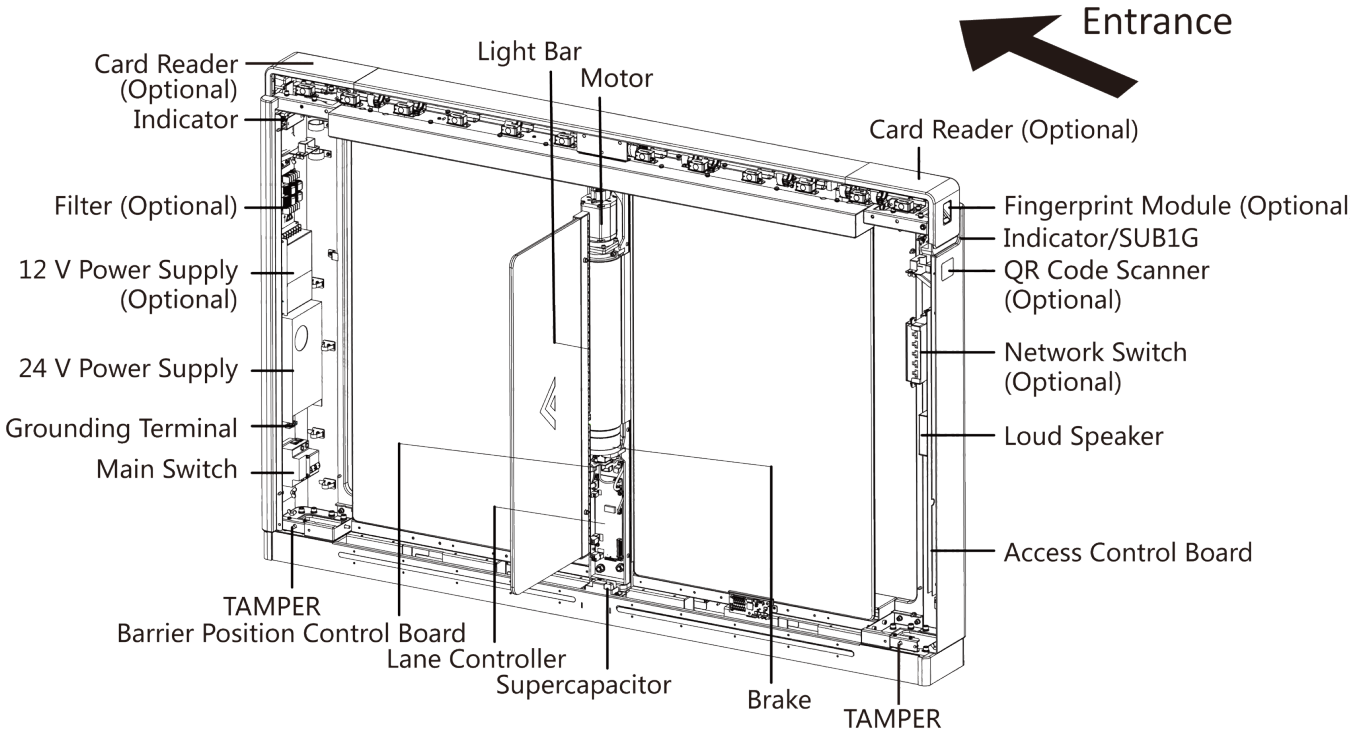

Figure 5-1 Components Diagram

The picture displayed below describes the IR sending/receiving module and their corresponding number on the pedestal.

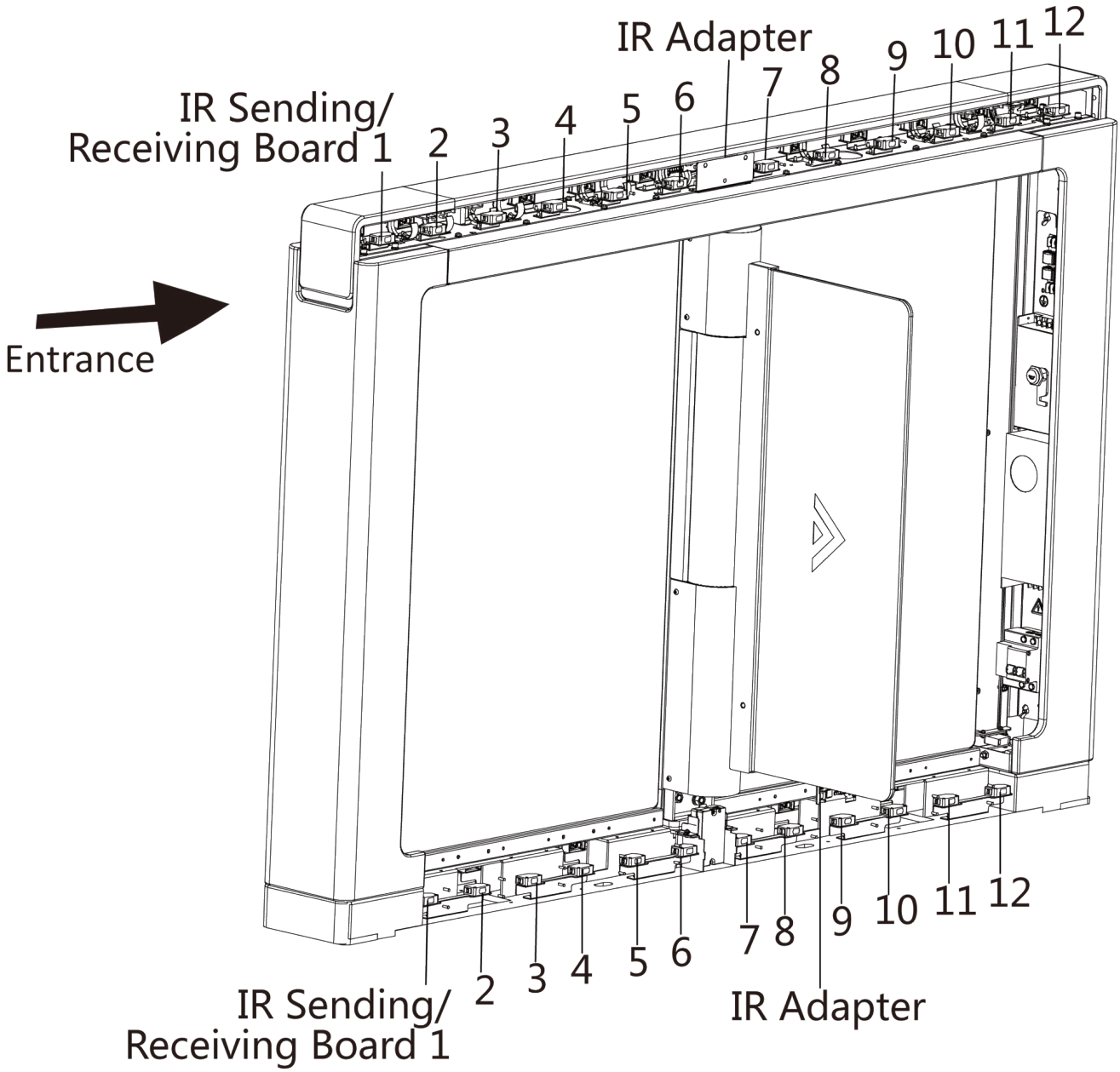

Figure 5-2 IR Sending/Receiving Module Position

Note

If the turnstile contains two lanes, standing at the entrance position, the IR modules on the left pedestal are the IR sending modules. The IR modules on the right pedestal are the IR receiving modules. The IR modules on the left side of the middle pedestal are the IR receiving modules, while the IR modules on the right side of the middle pedestal are the IR sending modules.

5.2 Wiring Electric Supply

Wire electric supply with the switch in the pedestal. Terminal L and terminal N are on the switch, while terminal PE should connect to a ground wire (yellow and green wire).

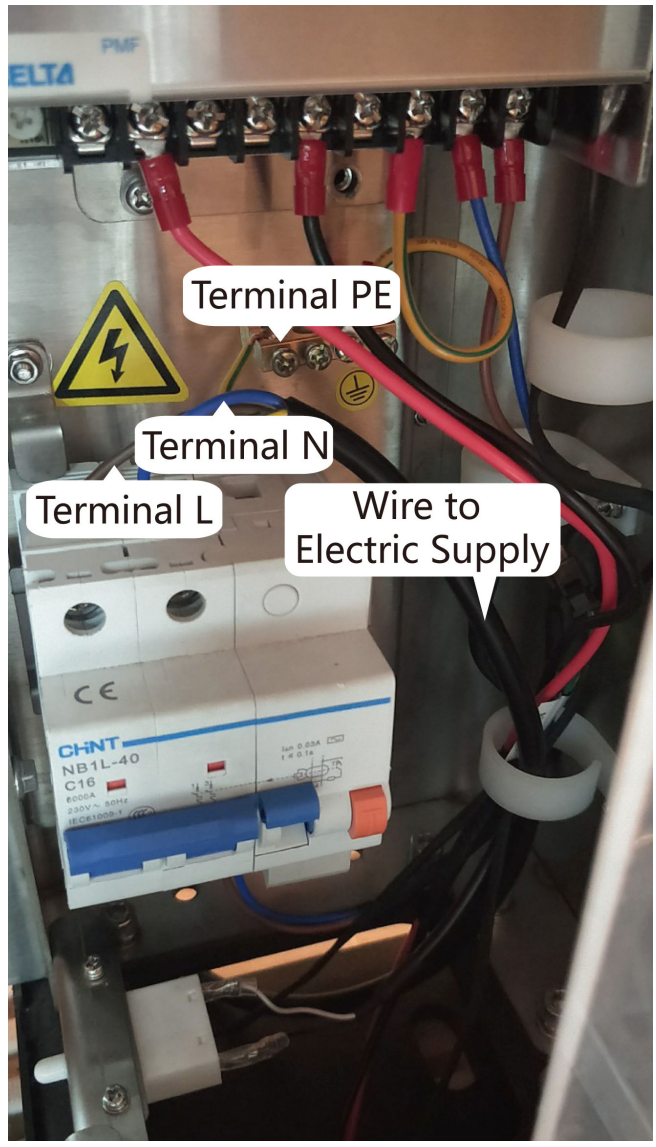

Note

- The cable bare part should be no more than 8 mm. It is suggested that you can immerse the bare part into the liquid tin. If possible, wear an insulation cap at the end of the bare cable. Make sure there's no bare copper or cable after the wiring.
- The Terminal L and the Terminal N cannot be wired reversely. Do not wire the input and output terminal reversely.

- To avoid people injury and device damage, when testing, the ground resistance of the equipotential points should not be larger than 2 Ω。
- Use the device in conjunction with an UPS.

5.3 Wire Interconnecting Cable

You should use interconnecting cables to connect the main lane board and the sub lane board for components communication.

The picture displayed below describes the cable hole's position on the pedestals.

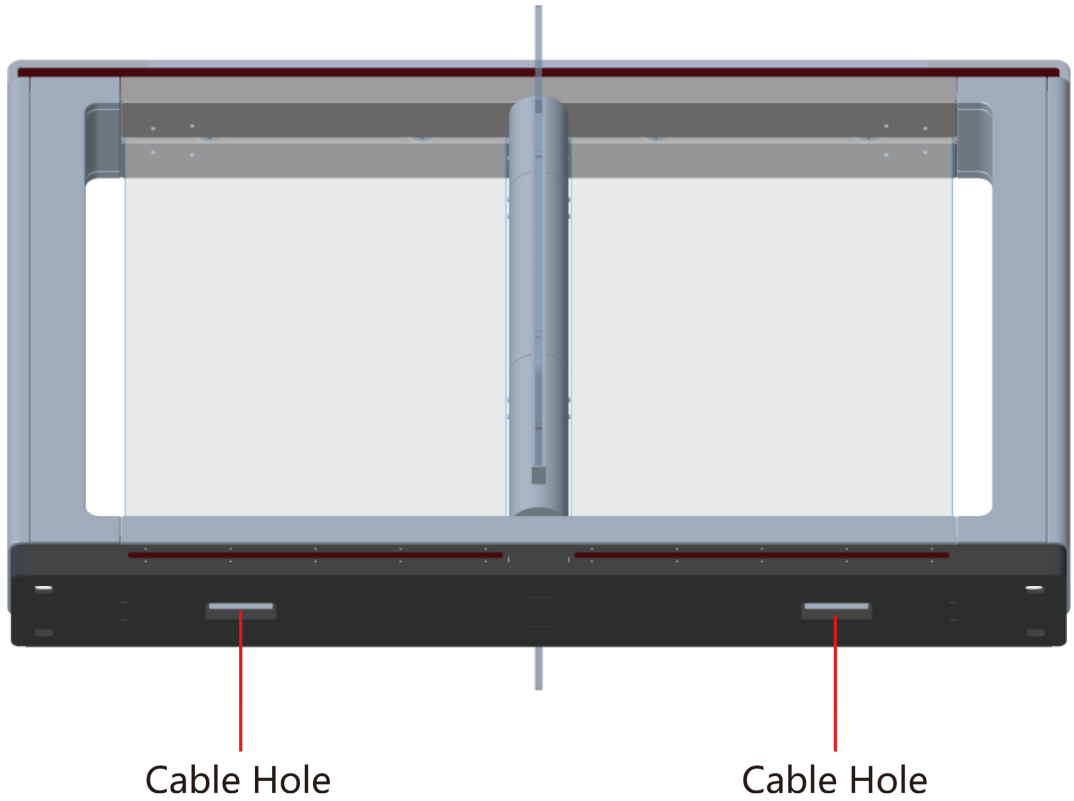

Figure 5-3 Cable Hole of Interconnecting Cable

Follow the instructions below to connect the interconnecting cable.

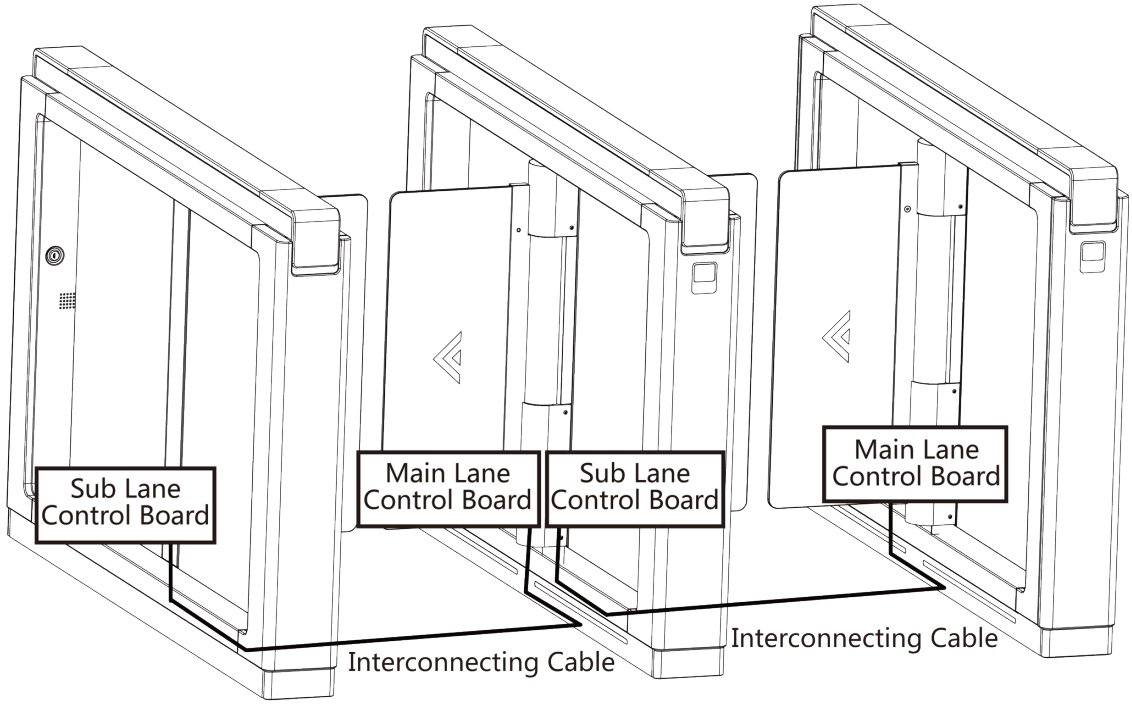

Figure 5-4 Connect Interconnecting Cable

5.4 Wire Network Switch

Connect the network cable and the network switch.

Steps

Note

The device do not support the PoE network switch. Connecting with the PoE network switch may damage the control board.

1. Open the side cover of the pedestal.

   Note

   For details, see ***Disassemble Side Base Cover*** .

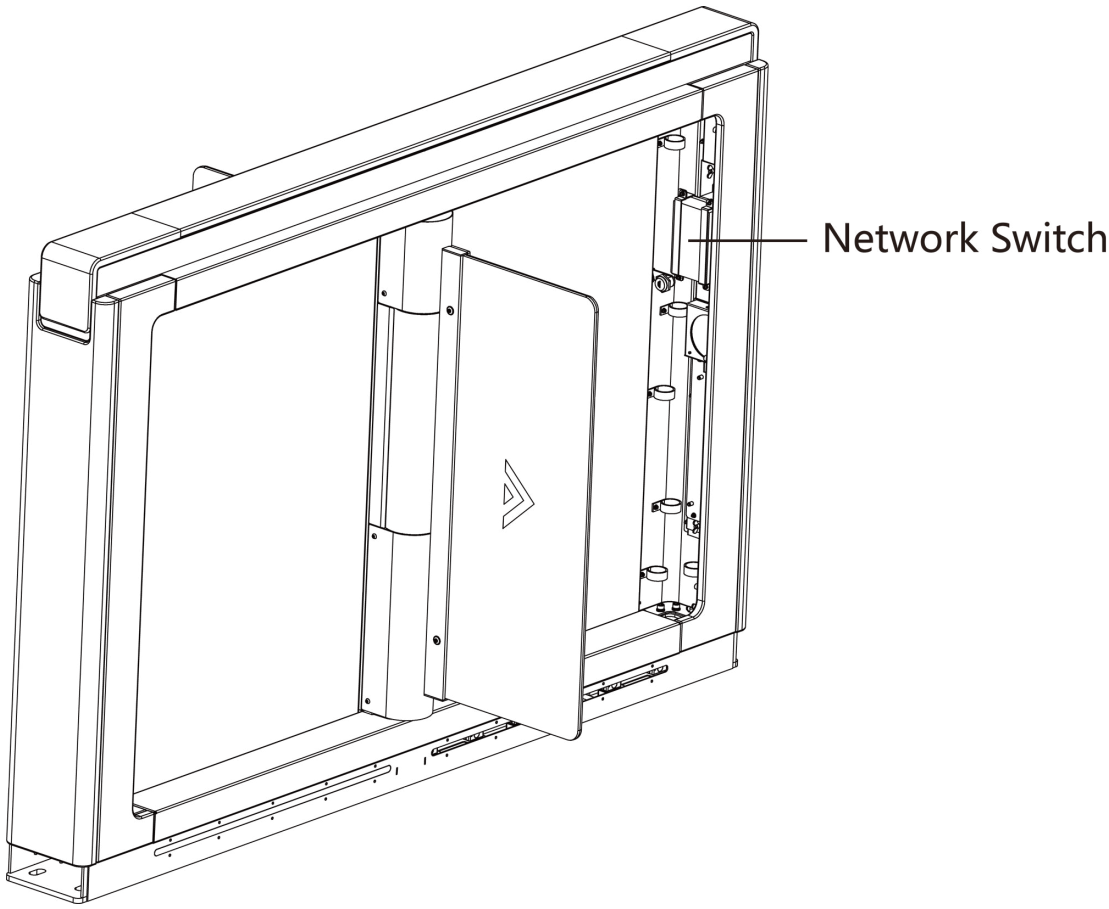

Figure 5-5 Network Switch Position

2. Lead out 12 V power supply from the main switch and connect it to the network switch's power interface.
3. Connect the network cable with the network switch.

5.5 Face Recognition Terminal Power Supply Wiring

You should wire the power supply terminal on the 12 V power supply component if you connect the turnstile to the face recognition terminal.

The terminal's position is shown as follows:

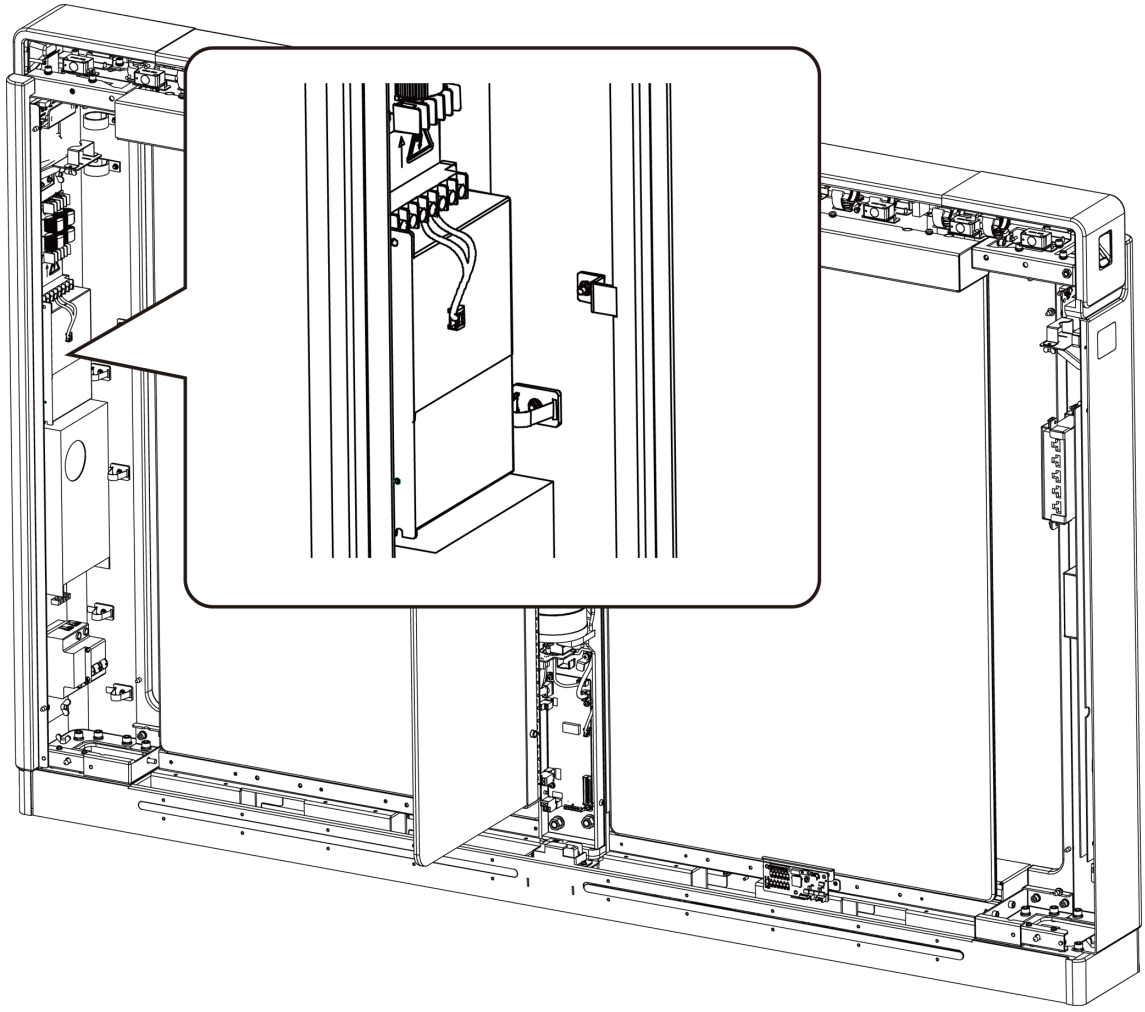

Figure 5-6 Face Recognition Terminal Power Supply Wiring Position

5.6 Terminal Description

The lane controller contains main lane controller and sub lane controller, which controls the IR beams, motor, and other components' work.

5.6.1 Main Control Board Terminal Description

The main lane control board contains power supply interface, supercapacitor interface, brake interface, motor drive interface, light board interface, motor encoder interface, door open position detection interface, debug port, lane communication interface, interconnecting interface, and DIP switch (reserved).

The picture displayed below is the main control board diagram.

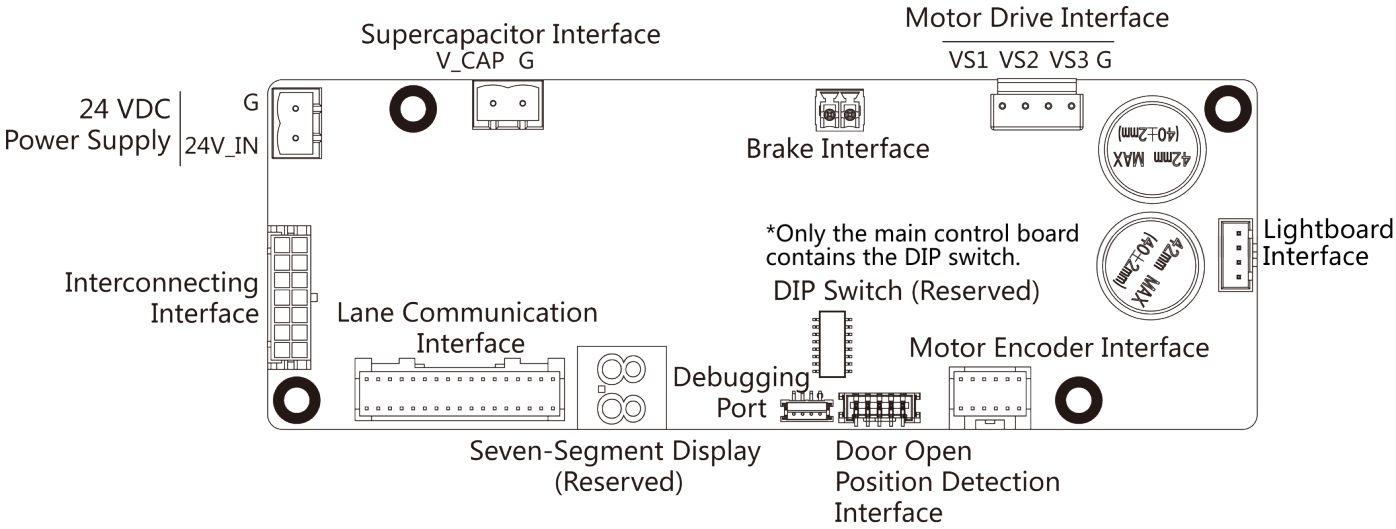

Figure 5-7 Main Control Board

5.6.2 Sub Control Board Terminal Description

The sub lane control board contains power supply interface, supercapacitor interface, brake interface, motor drive interface, light board interface, motor encoder interface, door open position detection interface, debug port, lane communication interface, and interconnecting interface.

The picture displayed below is the sub control board diagram.

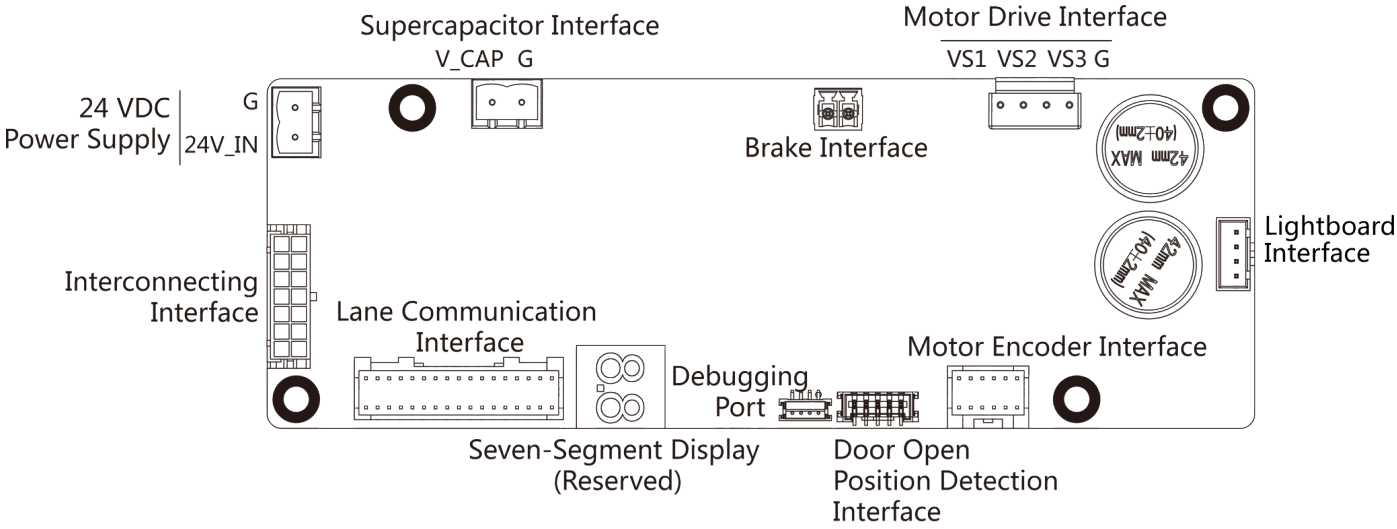

Figure 5-8 Sub Control Board

5.6.3 Access Control Board Terminal Description

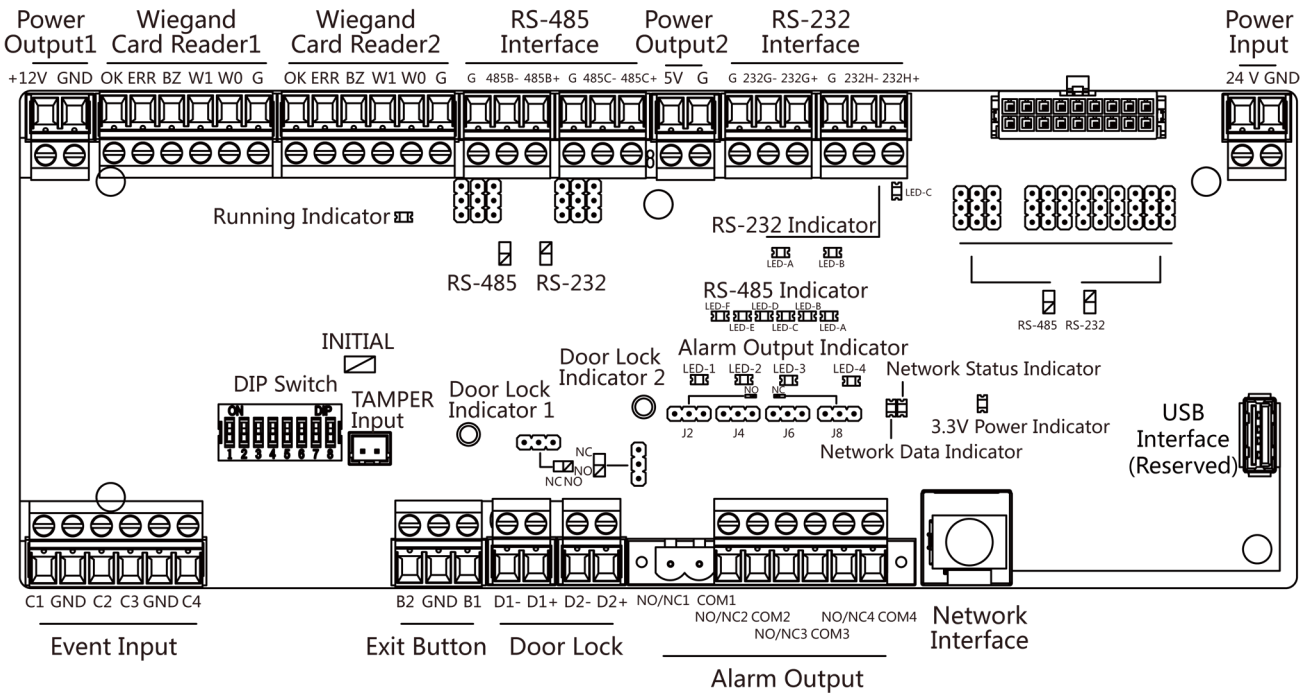

Figure 5-9 Access Control Board

Table 5-1 Access Control Board Terminal Description

Access Control Board Terminal Description		
Power Output 1	+12 V	Power Output
	GND	Grounding
Wiegand Card Reader 1	OK	Indicator of Card Reader Control Output (Invalid Card Output)
	ERR	Indicator of Card Reader Control Output (Valid Card Output)
	BZ	Card Reader Buzzer Control Output
	W1	Wiegand Head Read Data Input Data1
	W0	Wiegand Head Read Data Input Data0
	GND	Grounding
Wiegand Card Reader 2	OK	Indicator of Card Reader Control Output (Invalid Card Output)

Access Control Board Terminal Description		
	ERR	Indicator of Card Reader Control Output (Valid Card Output)
	BZ	Card Reader Buzzer Control Output
	W1	Wiegand Head Read Data Input Data1
	W0	Wiegand Head Read Data Input Data0
	GND	Grounding
RS-485 Interface	GND	Grounding
	RS-485 B-	Connect to Card Reader RS485-
	RS-485 B+	Connect to Card Reader RS485+
	GND	Grounding
	RS-485 C-	Connect to Card Reader RS485-
	RS-485 C+	Connect to Card Reader RS485+
Power Output 2	5 V	5 VDC Power Output
	GND	5 VDC Grounding
RS-232 Interface	GND	Grounding
	RS-232 G-	Connect to Card Reader RS232-
	RS-232 G+	Connect to Card Reader RS232+
	GND	Grounding
	RS-232 H-	Connect to Card Reader RS232-
	RS-232 H+	Connect to Card Reader RS232+
Power Input	+24 V	24 VDC Power Input
	GND	Grounding
Event Input	C1	Event Alarm Input 4
	GND	Grounding
	C2	Fire Input
	C3	Event Alarm Input 2
	GND	Grounding
	C4	Event Alarm Input 1

Access Control Board Terminal Description		
Exit Button	B2	Door 2 Signal Input
	GND	Grounding
	B1	Door 1 Signal Input
Door Lock (Relay)	D1-	Door 1 Relay Output (Dry Contact)
	D1+	
	D2-	Door 2 Relay Output (Dry Contact)
	D2+	
Alarm Output	NO/NC1	Alarm Output Relay 1 (Dry Contact)
	COM1	
	NO/NC2	Alarm Output Relay 2 (Dry Contact)
	COM2	
	NO/NC3	Alarm Output Relay 3 (Dry Contact)
	COM3	
	NO/NC4	Alarm Output Relay 4 (Dry Contact)
	COM4	
Network Interface	LAN	Network Accessing

Note

- The alarm input hardware interface is normally open by default. So only the normally open signal is allowed. It can be linked to the buzzer of the card reader and access controller, and the alarm relay output and open door relay output.
- The DIP of RS-485 card ID is set as 1 and 4 by default. 1 is for entering, and 4 is for exiting. If the user has configured visitor card, you should connect two card readers on the exiting side. Set the DIP switch of one of the card reader as 4, and set the other one's as 3.
  Card Reader 3 should be used together with the card recycler.
  Normal users should present card on Card Reader 4, while visitors should present card on Card Reader 3.
- The Wiegand card reader 1 and 2 refer to the entering and exiting card reader respectively.
- The alarm output supports relay output.
- For any requirements, the door lock can control the door barrier status of the third party. D1 controls the barrier opening for entrance, while D2 controls the door opening for exit. For details, see ***Barrier Control Relay Output Mode*** .

- C3 and C4 in the event input can also be people counting interface. C3 controls people counting for entrance, while C4 controls people counting for exit. When the access control board detects signals in C3 and C4, the people number will be accumulated. For detailed information about people counting and people number, see *Configuring People Counting Parameters* in *User Manual of iVMS-4200 AC Client Software*.
- For detailed information about the DIP switch, see ***DIP Switch*** .

5.6.4 Access Control Board Serial Port ID Description

You can use the jumper cap on the access control board to switch the interface communication mode. For details about switching between RS-232 and RS-485 communication type, see *Switching RS-485/RS-232 Mode*.

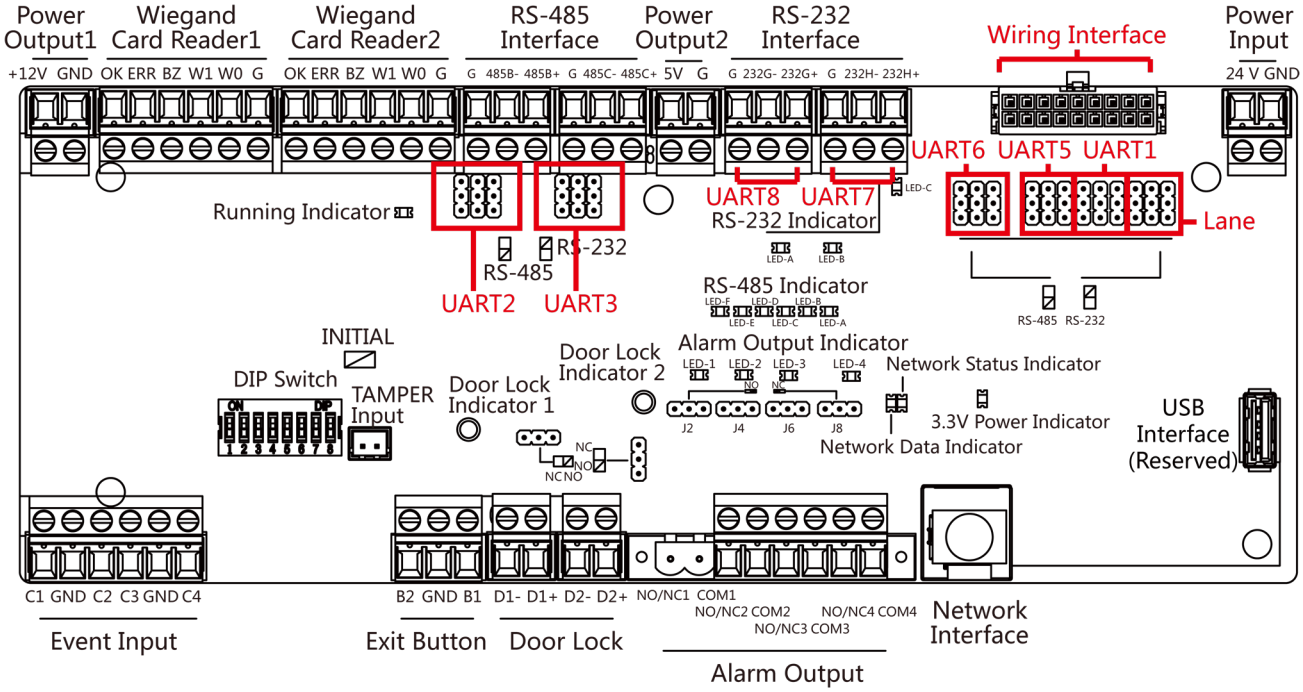

Figure 5-10 Access Control Board

According to the picture above, the RS-485 serial port corresponds to UART2 and UART3. RS-232 serial port is corresponded to UART7 and UART8. Wiring Interface is corresponded to UART1, UART4, UART6, UART6, and Lane.

The access control board descriptions are as follows:

UART2/UART3 Jumper Cap

Reserved serial port. Use the jumper cap to switch the serial port communication mode. You can switch between the RS-485 communication mode and the RS-232 communication mode. By default, it is in RS-485 communication mode.

UART6 Jumper Cap

Use the jumper cap to switch the serial port communication mode with the sub lane controller. You can switch between the RS-232 communication mode and the RS-485 communication mode. By default, it is in RS-232 communication mode.

UART5 Jumper Cap

Use the jumper cap to switch the serial port communication mode with the sub lane controller. You can switch between the RS-485 communication mode and the RS-232 communication mode. By default, it is in RS-485 communication mode.

UART1 Jumper Cap

Use the jumper cap to switch the serial port communication mode with the main lane controller. You can switch between the RS-485 communication mode and the RS-232 communication mode. By default, it is in RS-485 communication mode.

Lane

Use the jumper cap to switch the serial port communication mode with the lane controller. By default, the interface is wired and it is in RS-485 communication mode. If wiring other controllers **(compatible with Hikvision communication protocol)**, use the jumper cap to switch between RS-485 and RS-232 communication mode.

UART4

The serial port is in the wiring interface according to the picture above, which has a fixed RS-232 communication mode to communicate with the main lane controller. It contains no jumper cap and cannot change the communication mode.

UART7/UART8

Reserved serial port. The serial port has a fixed RS-232 communication mode. It contains no jumper cap and cannot change the communication mode. The RS-232 interface's QR code transmission database should no more than 64 bit.

The reserved interface positions in the turnstile and their corresponded UART No. are as follows:

Note

The diagram is for reference only.

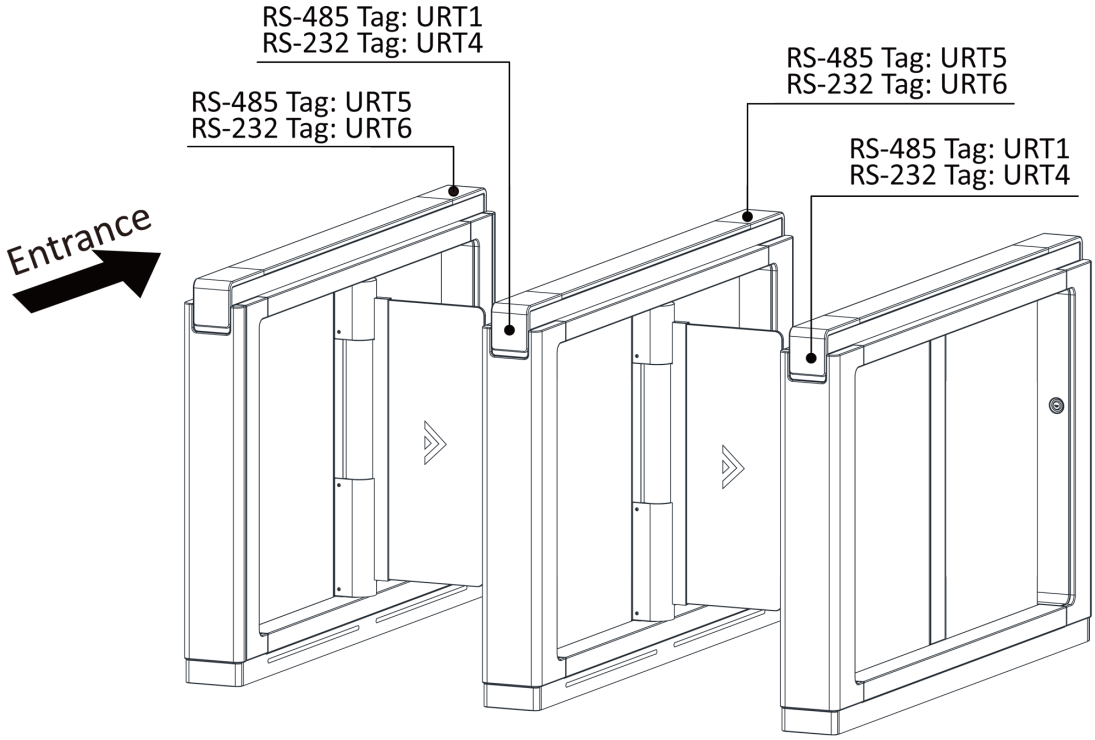

Figure 5-11 Interface and Corresponded UART No.

5.6.5 RS-485 Wiring

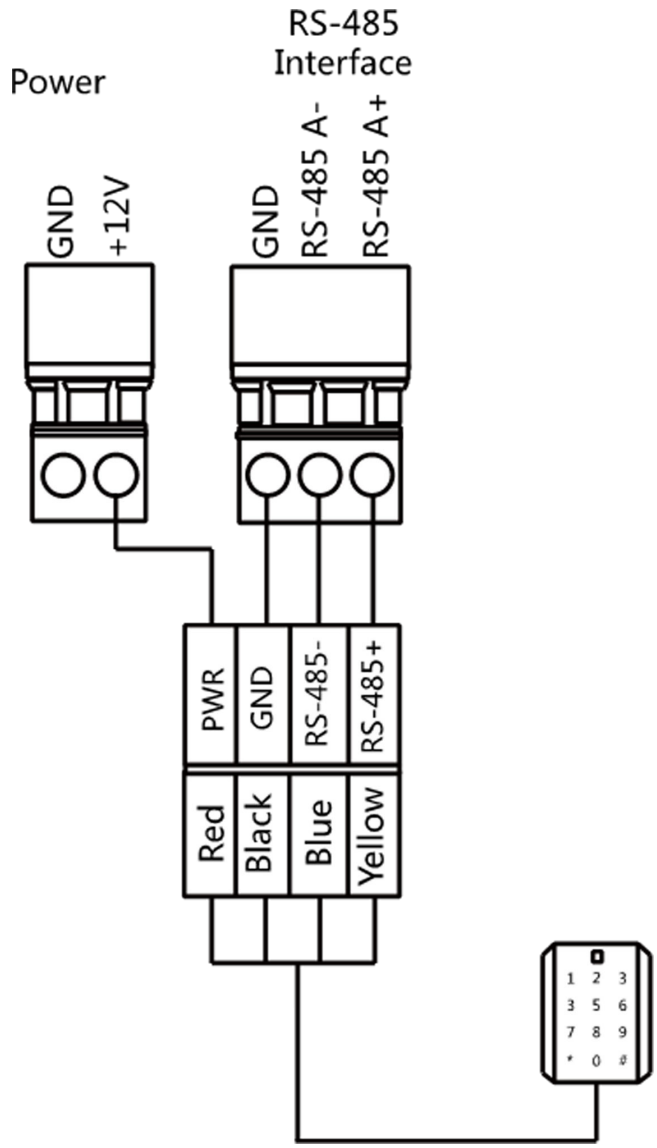

Note

- There are four RS-485 interfaces, which are for connecting ID card reader, IC card reader, QR code scanner, fingerprint and card reader, card recycler, text screen, fingerprint reader, and face recognition terminal. Take the wiring of RS-485 card reader as an example.
- For details about text screen, see *Configuring Screen Parameters* in *User Manual of iVMS-4200 AC Client Software*.

5.6.6 RS-232 Wiring

Note

There are three RS-232 interfaces (UART4, UART7, and UART8). UART7 and UART8 can connect QR code scanner, and card recycler, while UART4 can connect QR code scanner, card recycler, and face recognition terminal.

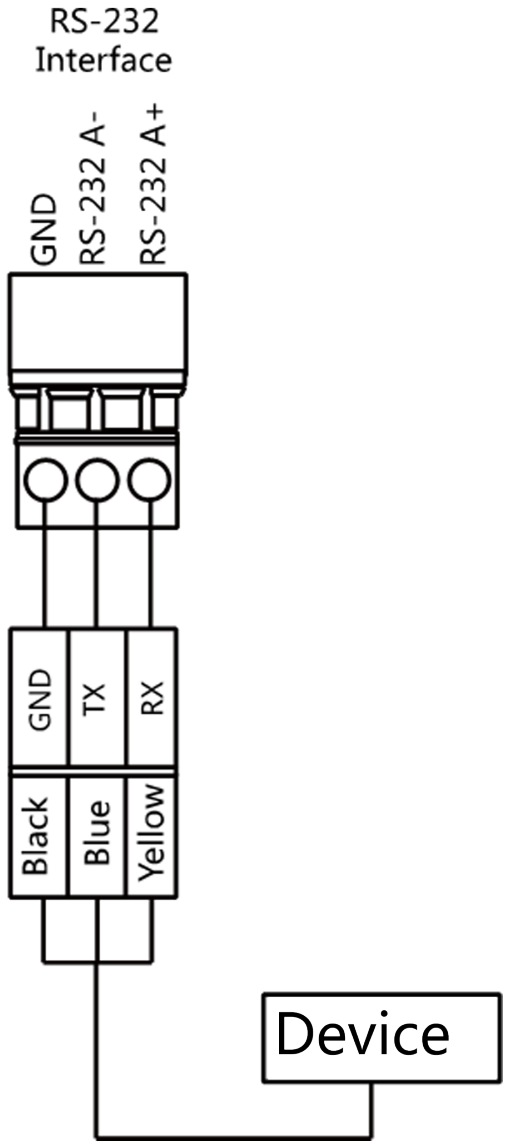

5.6.7 Wiegand Wiring

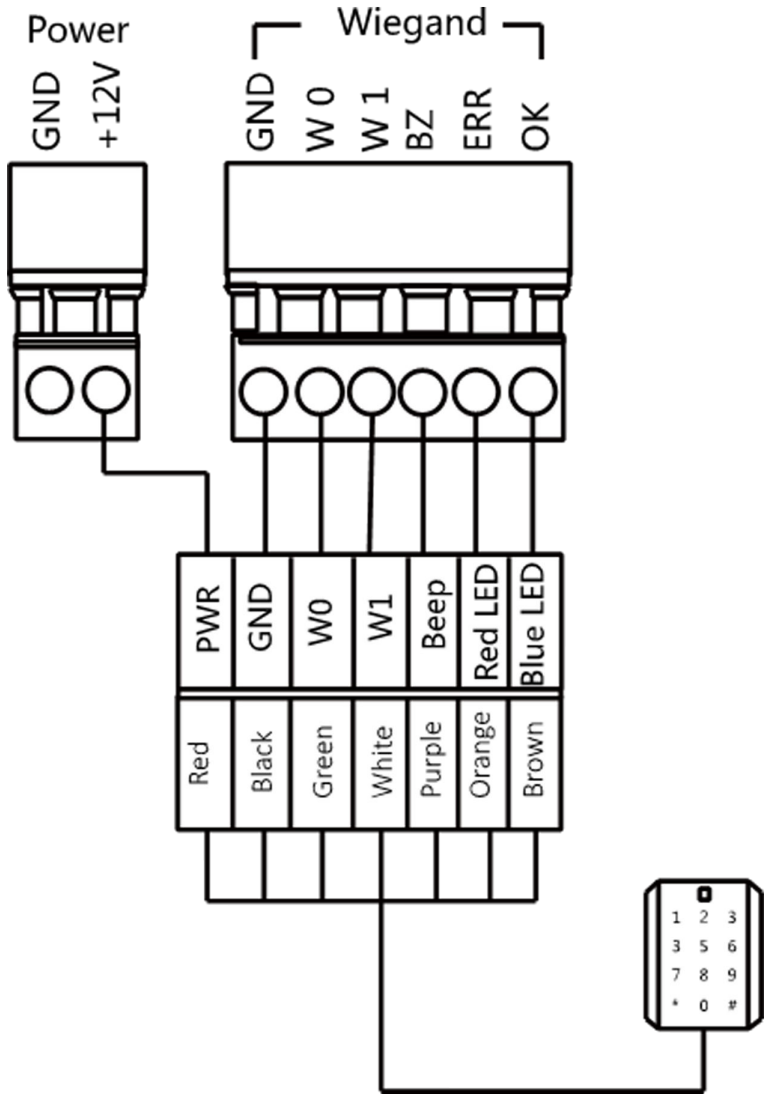

Note

Connect the OK/ERR/BZ if the access controller should control the LED and buzzer of the Wiegand card reader.

5.6.8 Barrier Control Wiring

By default, the barrier has connected with the access control board. The lane control board can control the barrier status. If possible, the device can connect with a third party lane control board

to control the third party barriers. Interface D1 controls barrier opening for entrance, while interface D2 controls barrier opening for exit.

Note

Use the jumper cap to switch the relay status. For details, see ***Barrier Control Relay Output Mode*** .

Entering Wiring

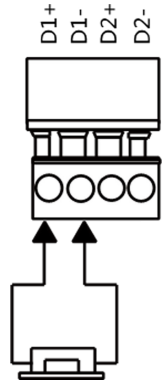

Exiting Wiring

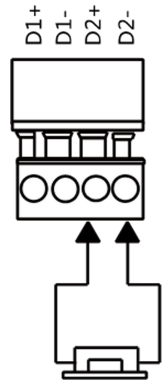

5.6.9 Alarm Output Wiring

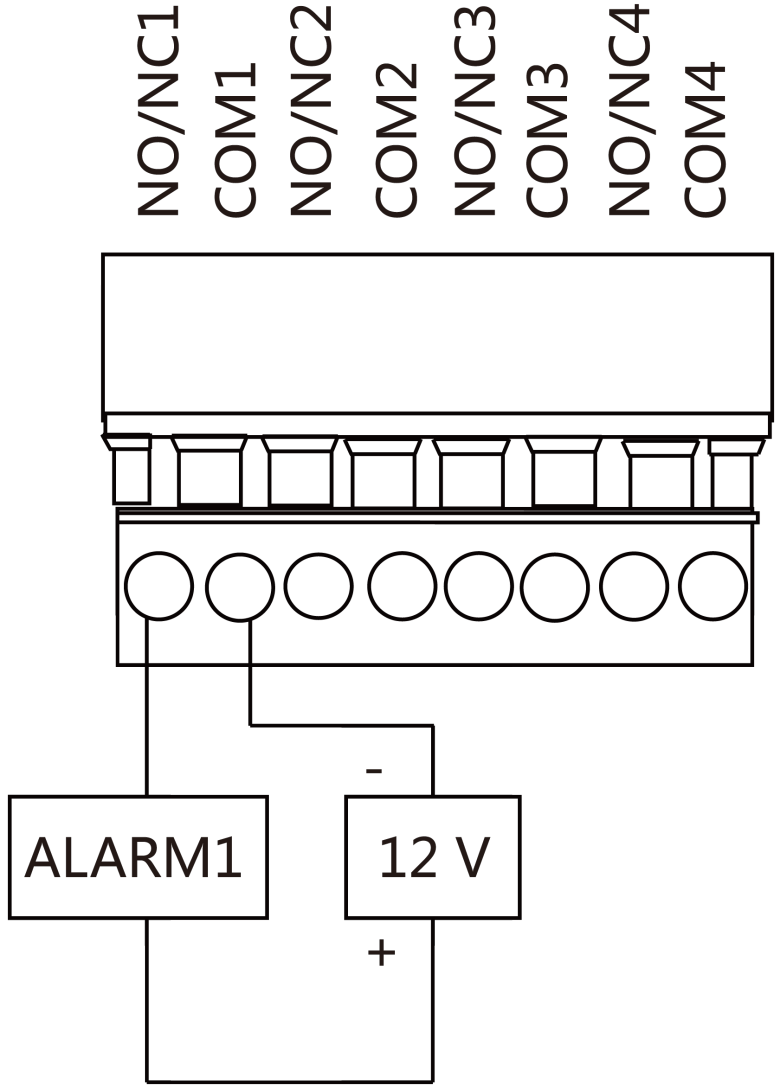

Note

For details about changing the relay output status via the jumper cap, see ***Alarm Relay Output Mode (NO/NC)*** .

5.6.10 Exit Button Wiring

You can view the exit button wiring diagram.

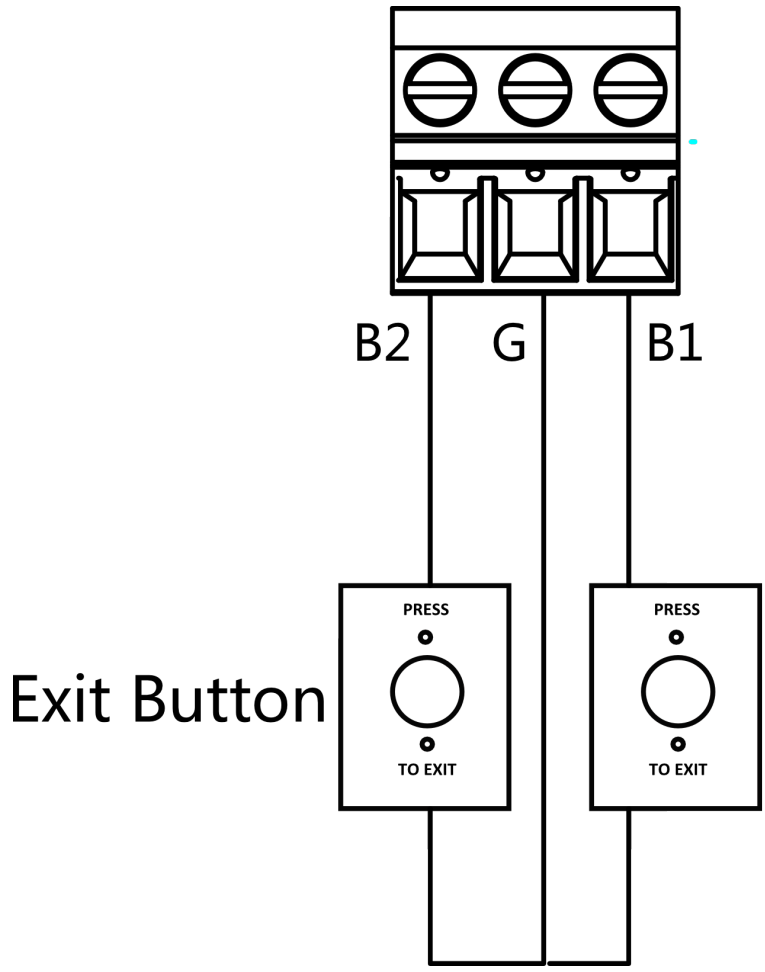

Figure 5-12 Exit Button Wiring

Chapter 6 Device Settings

After installation and wiring completed, you should set the barriers closed position (study mode) before entering the working mode.

You can also set the test mode, normal mode, passing mode and memory mode, pair the keyfob, initialize the hardware, switching between RS-485 communication mode and RS-232 communication mode, and view relay output NO/NC diagram by setting the DIP switch on the access control board.

- Study Mode: The barrier will learn the closed position.
- Normal Mode: The device will work properly.
- Test Mode: Test mode is the same as the normal mode except that the device cannot report the alarm, the event, or the people counting information to the center.
- Passing Mode: There are 9 passing modes, including controlled bi-direction, controlled entrance and prohibited exit, controlled entrance and free exit, free bi-direction, free entrance and controlled exit, free entrance and prohibited exit, prohibited bi-direction, prohibited entrance and free exit.
- Memory Mode: By default, the memory mode is enabled. When multiple cards are presented and authenticated, it allows multiple persons passing through the lane. When it counts the passing people number is equal to the card presented times, or no person passing through the lane after the last person passing, the barriers will be closed.

Note

You can also set the DIP switch on the access control board to control the entrance and exit controlling type, keyfob pairing, etc. For details about the DIP switch value, see ***DIP Switch*** .

6.1 Set Study Mode

Enter the study mode through DIP switching to set the closed position of the device barrier.

Steps

1. Set The No.1 of the 8-digit DIP Switch on the main control board to ON by referring the following figure to enter the study mode.

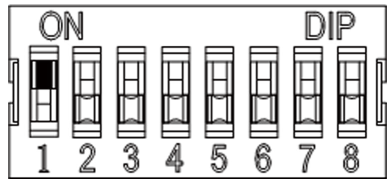

2. Adjust the closed position of the barrier.
3. Power on the device.

   The device will remember the current position (closed position) automatically.

4. Power off the device.
5. Set the No.1 switches of the 8-digit DIP Switch on the main control board by referring to the following figure.

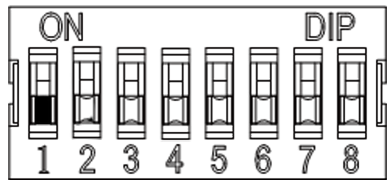

6. Power on the device again.

Note

For details about the DIP switch value and meaning, see *DIP Switch Description*.

The barrier will open automatically and turns back to the closed position. At this circumstance, the device enters the normal mode.

6.2 Pair Keyfob (Optional)

Pair the remote control to the device through DIP switch to open/close the barrier remotely.

Before You Start

Ask our technique supports or sales and purchase the keyfob.

Steps

Note

Up to 32 keyfobs can be added to the turnstile.

1. Power off the turnstile.
2. Set the No.4 switch of the DIP Switch on the access control board to the ON side.

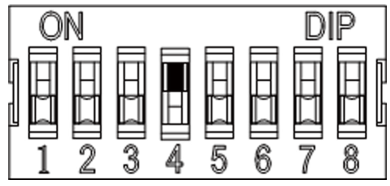

3. Power on the turnstile and it will enter the keyfob pairing mode.
4. Hold the **Close** button for more than 10 seconds. Or pair turnstile and keyfob in the client software, see *Manage Keyfob User* of the user manual for more details.

   The keyfob's indicator of the will flash twice if the pairing is completed.
5. Set the No.4 switch to OFF, and reboot the turnstile to take effect.

Note

- Only one turnstile can pair the keyfob. If multiple turnstiles are in the pairing mode, the keyfob will select only one of them to pair.
- For details about DIP switch value and meaning, see ***DIP Switch*** .

6. **Optional:** Go to **System → User → Keyfob User** on the remote control page of the client software to delete the keyfob.

6.3 Initialize Device

Steps

1. Remove the JP11 jumper cap on the access control board.

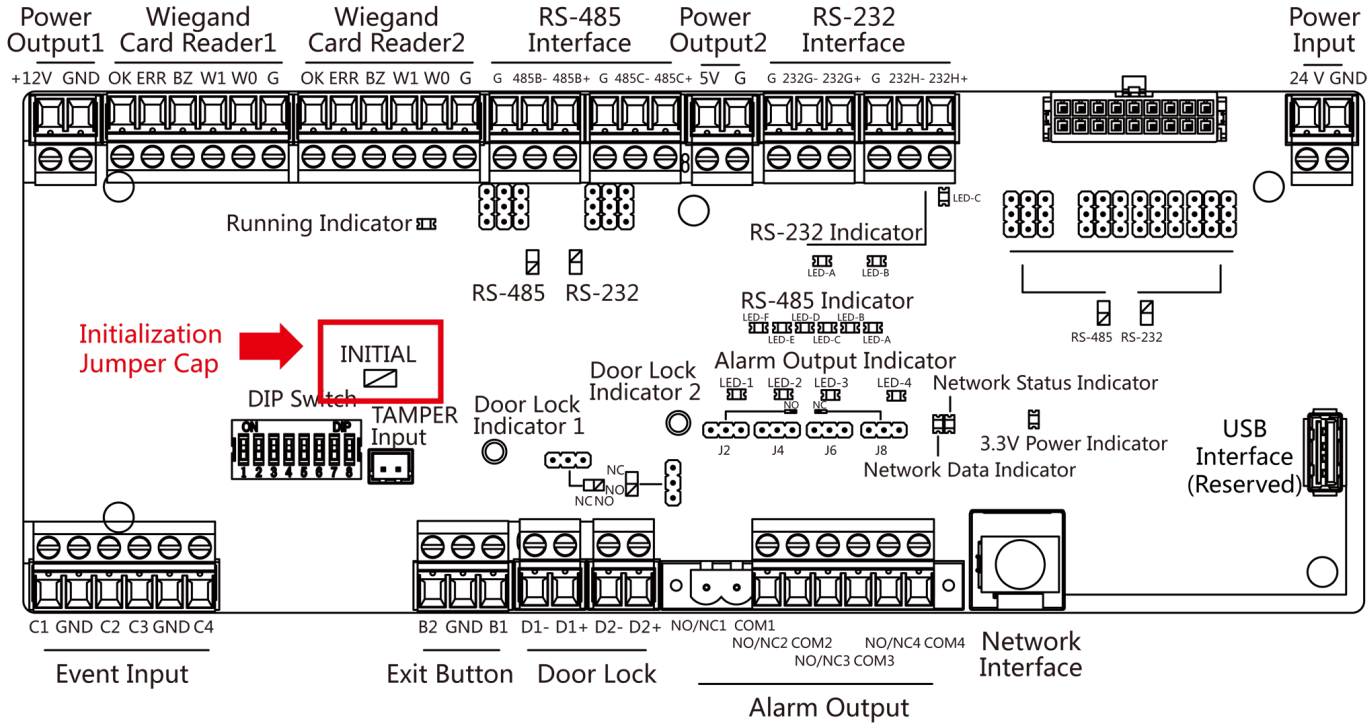

Figure 6-1 Initialization Jumper Cap

2. Disconnect the power and reboot the device. The device buzzer buzzes a long beep.
3. When the beep stopped, plug the jumper cap back.
4. Disconnect the power and power on the device again.

Caution

The initialization of the device will restore all the parameters to the default setting and all the device events are deleted.

Note

Make sure no persons are in the lane when powering on the device.

6.4 Switch to RS-485/RS-232 Mode

Take the Serial Port 4 and on the access control board as an example. If the Jumper cap's position is like the picture displayed below. (The black part is the jumper cap.) The serial port is in RS-485 communication mode.

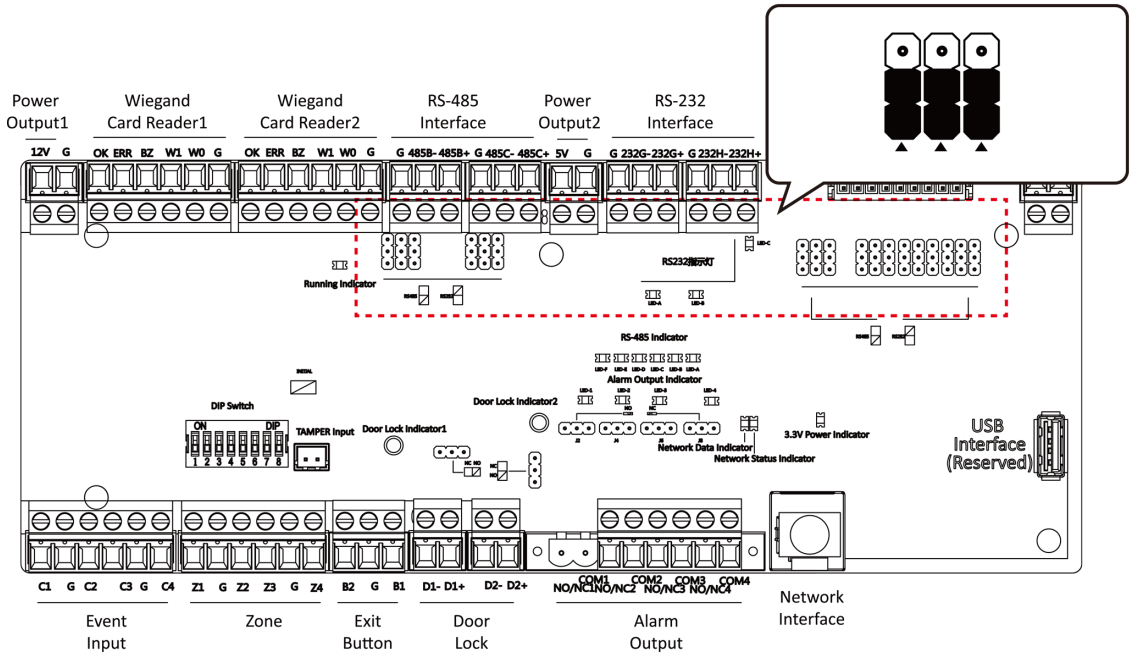

Figure 6-2 Jumper Cap Status of RS-485 Interface

If the Jumper cap's position is like the picture displayed below. (The black part is the jumper cap.) The serial port is in RS-232 communication mode.

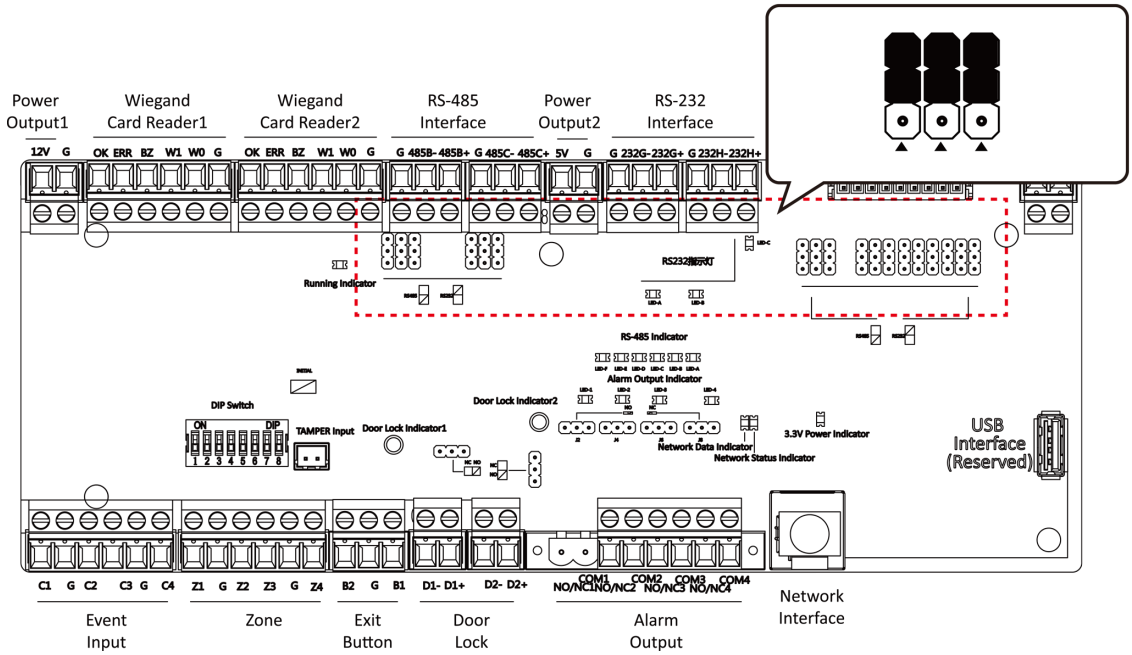

Figure 6-3 Jumper Cap Status of RS-232 Interface

6.5 Switch Relay Output Mode (NO/NC)

6.5.1 Barrier Control Relay Output Mode

The pins of the barrier control relay on the access control board is as below:

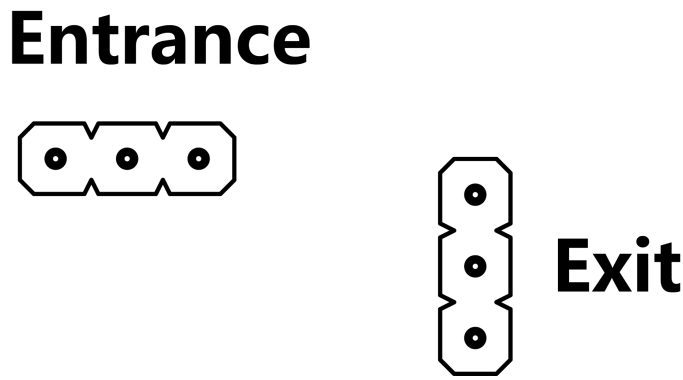

Figure 6-4 Pin Appearance

The jumper cap's position of barrier opening for entrance (NO) is as below:

The jumper cap's position of barrier opening for exit (NO) is as below:

The jumper cap's position of barrier closing for entrance (NC) is as below:

The jumper cap's position of barrier closing for exit (NC) is as below:

6.5.2 Alarm Relay Output Mode (NO/NC)

Alarm Relay Output Mode (NO):

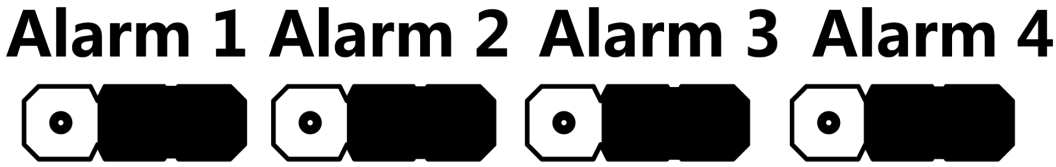

Alarm Relay Output Mode (NC):

Chapter 7 Activation

You should activate the device before the first login. After powering on the device, the system will switch to Device Activation page.

Activation via the device, SADP tool and the client software are supported.

The default values of the device are as follows:

- The default IP address: 192.0.0.64
- The default port No.: 8000
- The default user name: admin

7.1 Activate via SADP

SADP is a tool to detect, activate and modify the IP address of the device over the LAN.

Before You Start

- Get the SADP software from the supplied disk or the official website ***http://www.hikvision.com/en/*** , and install the SADP according to the prompts.
- The device and the PC that runs the SADP tool should be within the same subnet.

The following steps show how to activate a device and modify its IP address. For batch activation and IP addresses modification, refer to *User Manual of SADP* for details.

Steps

1. Run the SADP software and search the online devices.
2. Find and select your device in online device list.
3. Input new password (admin password) and confirm the password.

   Caution

   STRONG PASSWORD RECOMMENDED-We highly recommend you create a strong password of your own choosing (using a minimum of 8 characters, including upper case letters, lower case letters, numbers, and special characters) in order to increase the security of your product. And we recommend you reset your password regularly, especially in the high security system, resetting the password monthly or weekly can better protect your product.

4. Click **Activate** to start activation.

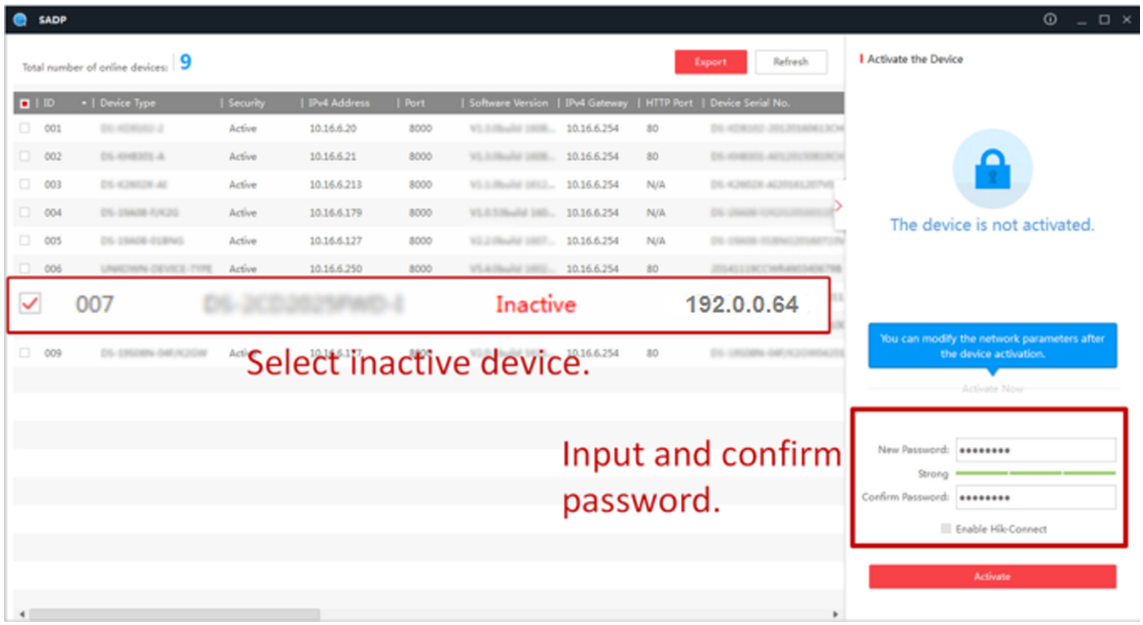

Status of the device becomes **Active** after successful activation.

5. Modify IP address of the device.
   1) Select the device.
   2) Change the device IP address to the same subnet as your computer by either modifying the IP address manually or checking **Enable DHCP**.
   3) Input the admin password and click **Modify** to activate your IP address modification.

7.2 Activate Device via Client Software

For some devices, you are required to create the password to activate them before they can be added to the software and work properly.

Steps

Note

This function should be supported by the device.

1. Enter the Device Management page.
2. Click on the right of **Device Management** and select **Device**.
3. Click **Online Device** to show the online device area.

   The searched online devices are displayed in the list.
4. Check the device status (shown on **Security Level** column) and select an inactive device.
5. Click **Activate** to open the Activation dialog.
6. Create a password in the password field, and confirm the password.

Caution

The password strength of the device can be automatically checked. We highly recommend you change the password of your own choosing (using a minimum of 8 characters, including at least three kinds of following categories: upper case letters, lower case letters, numbers, and special characters) in order to increase the security of your product. And we recommend you change your password regularly, especially in the high security system, changing the password monthly or weekly can better protect your product.

Proper configuration of all passwords and other security settings is the responsibility of the installer and/or end-user.

7. Click **OK** to activate the device.

Appendix A. Tips for Scanning Fingerprint

Recommended Finger

Forefinger, middle finger or the third finger.

Correct Scanning

The figure displayed below is the correct way to scan your finger:

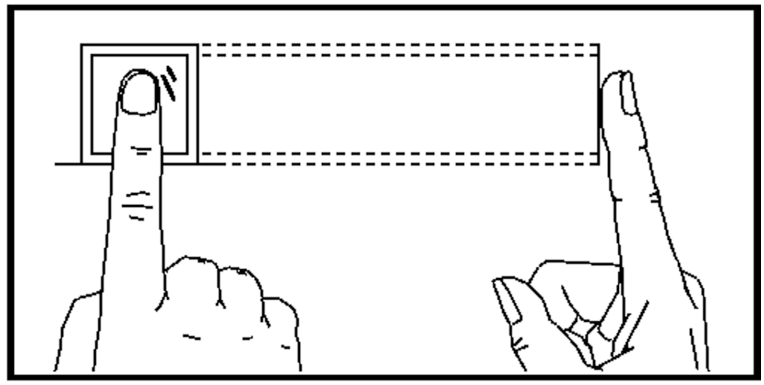

You should press your finger on the scanner horizontally. The center of your scanned finger should align with the scanner center.

Incorrect Scanning

The figures of scanning fingerprint displayed below are incorrect:

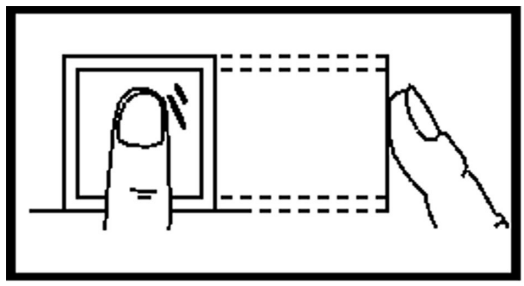

Vertical

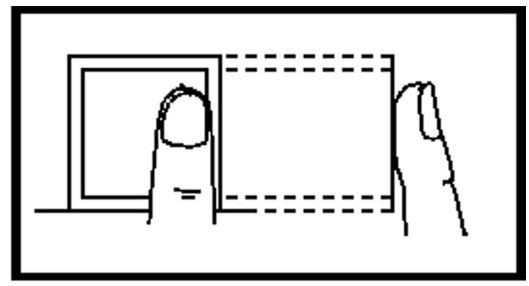

Edge I

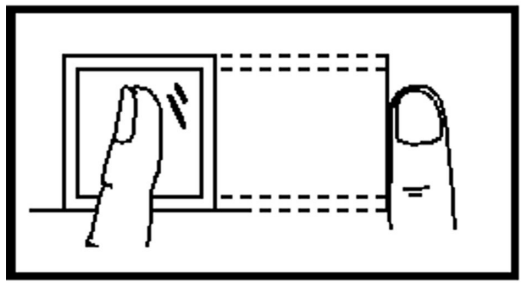

Side

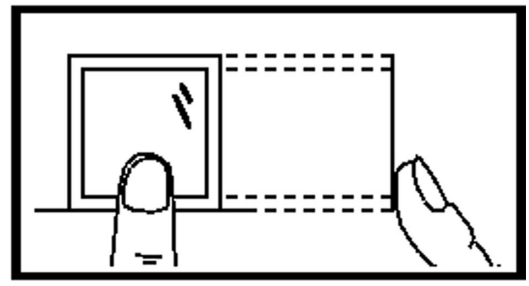

Edge II

Environment

The scanner should avoid direct sun light, high temperature, humid conditions and rain.
When it is dry, the scanner may not recognize your fingerprint successfully. You can blow your finger and scan again.

Others

If your fingerprint is shallow, or it is hard to scan your fingerprint, we recommend you to use other authentication methods.
If you have injuries on the scanned finger, the scanner may not recognize. You can change another finger and try again.

Appendix B. DIP Switch

B.1 DIP Switch Description

The DIP switch is on the main lane control board. No.1 to No 8 is from the low bit to the high bit.

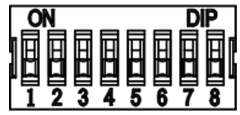

When the switch is towards ON, it means the switch is enabled, otherwise, the switch is off. If you set the DIP switch like the figure displayed below, its binary value is 00001100, and its decimal value is 12.

B.2 DIP Switch Corresponded Functions

Note

After setting the DIP switch, you should reboot the device, or the function cannot take effect.

The 8-bit DIP switch corresponded functions on the access control board are as follows:

Bit	Device Mode	Function	Decimal Value	DIP Switch Address Diagram
1 to 2	Work Mode	Normal Mode	0	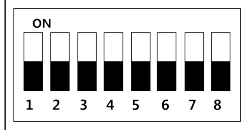
		Study Mode	1	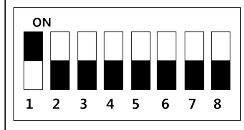
		Test Mode	2	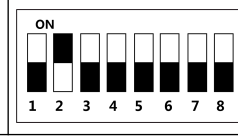

Bit	Device Mode	Function	Decimal Value	DIP Switch Address Diagram
3	Memory Mode	Enable Memory Mode	0	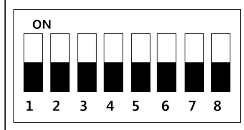
		Disable Memory Mode	1	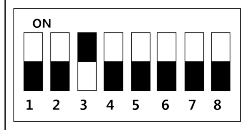
4	Keyfob Paring Mode	Disable Keyfob Paring Mode	0	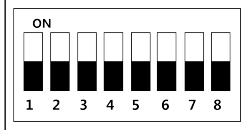
		Enable Keyfob Paring Mode	1	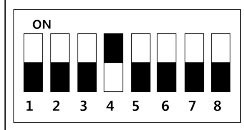
5 to 8	Passing Mode	Controlled Bi-direction	0	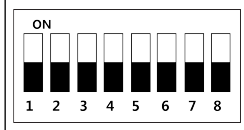
		Controlled Entrance and Prohibit Exit	1	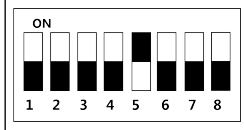
		Controlled Entrance and Free Exit	2	
		Free Bi-direction	3	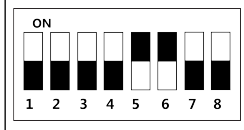
		Free Entrance and Controlled Exit	4	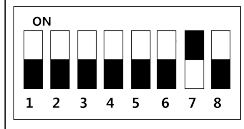
		Free Entrance and Prohibit Exit	5	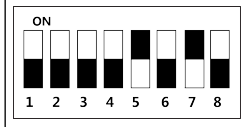
		Prohibited Bi-direction	6	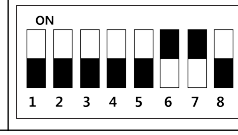

Bit	Device Mode	Function	Decimal Value	DIP Switch Address Diagram
		Prohibit Entrance and Controlled Exit	7	
		Prohibit Entrance and Free Exit	8	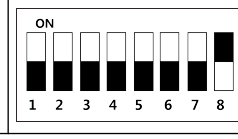

Appendix C. Event and Alarm Type

Event	Alarm Type
Tailgating	Visual and Audible
Reverse Passing	Visual and Audible
Force Accessing	None
Climb over Barrier	Visual and Audible
Overstay	Visual and Audible
Passing Timeout	None
Intrusion	Visual and Audible
Free Passing Authentication Failed	Visual
Barrier Obstructed	None

Appendix D. Table of Audio Index Related Content

Index	Content
1	Authenticated.
2	Card No. does not exist.
3	Card No. and fingerprint mismatch.
4	Climbing over the barrier.
5	Reverse passing.
6	Passing timeout.
7	Intrusion.
8	Force accessing.
9	Tailgating.
10	No permissions.
11	Authentication time out.
12	Authentication failed.
13	Expired card.
14	Staying out of time.

Appendix E. Error Code Description

The swing barrier will display the error code on the seven-segment display if error occurred. Refer to the table below to find the description of each number.

Error Reason	Code	Error Reason	Code
Normal Working	00	Lower Fifth IR Beam Triggered	21
First IR Beam Triggered	01	Lower Sixth IR Beam Triggered	22
Second IR Beam Triggered	02	Lower Seventh IR Beam Triggered	23
Third IR Beam Triggered	03	Lower Eighth IR Beam Triggered	24
Fourth IR Beam Triggered	04	Lower Ninth IR Beam Triggered	25
Fifth IR Beam Triggered	05	Lower Tenth IR Beam Triggered	26
Sixth IR Beam Triggered	06	Lower Eleventh IR Beam Triggered	27
Seventh IR Beam Triggered	07	Lower Twelfth IR Beam Triggered	28
Eighth IR Beam Triggered	08	Lower Thirteenth IR Beam Triggered	29
Ninth IR Beam Triggered	09	Lower Fourteenth IR Beam Triggered	30
IR Beam Triggered	10	Lower Fifteenth IR Beam Triggered	31
Eleventh IR Beam Triggered	11	Lower Sixteenth IR Beam Triggered	32
Twelfth IR Beam Triggered	12	Light Board Offline (Entrance)	49
Thirteenth IR Beam Triggered	13	Light Board Offline (Exit)	50
Fourteenth IR Beam Triggered	14	IR Adapter Offline (Up)	51
Fifteenth IR Beam Triggered	15	IR Adapter Offline (Low)	52
Sixteenth IR Beam Triggered	16	CAN Bus Exception	53
Lower First IR Beam Triggered	17	Not Studying	54

Error Reason	Code	Error Reason	Code
Lower Second IR Beam Triggered	18	Obstruction	55
Lower Third IR Beam Triggered	19	Exceeding Studying Range	56
Lower Fourth IR Beam Triggered	20	Motor Exception	57

Appendix F. Communication Matrix and Device Command

Communication Matrix

Scan the following QR code to get the device communication matrix.
Note that the matrix contains all communication ports of Hikvision access control and video intercom devices.

Figure F-1 QR Code of Communication Matrix

Device Command

Scan the following QR code to get the device common serial port commands.
Note that the command list contains all commonly used serial ports commands for all Hikvision access control and video intercom devices.

Figure F-2 Device Command

See Far, Go Further