DS-K3B411X Series Swing Barrier

Quick Start Guide

Legal Information

©2020 Hangzhou Hikvision Digital Technology Co., Ltd. All rights reserved.

About this Manual

The Manual includes instructions for using and managing the Product. Pictures, charts, images and all other information hereinafter are for description and explanation only. The information contained in the Manual is subject to change, without notice, due to firmware updates or other reasons. Please find the latest version of this Manual at the Hikvision website (***https://www.hikvision.com/***).
Please use this Manual with the guidance and assistance of professionals trained in supporting the Product.

Trademarks

HIKVISION and other Hikvision's trademarks and logos are the properties of Hikvision in various jurisdictions.
Other trademarks and logos mentioned are the properties of their respective owners.

Disclaimer

TO THE MAXIMUM EXTENT PERMITTED BY APPLICABLE LAW, THIS MANUAL AND THE PRODUCT DESCRIBED, WITH ITS HARDWARE, SOFTWARE AND FIRMWARE, ARE PROVIDED “AS IS” AND “WITH ALL FAULTS AND ERRORS”. HIKVISION MAKES NO WARRANTIES, EXPRESS OR IMPLIED, INCLUDING WITHOUT LIMITATION, MERCHANTABILITY, SATISFACTORY QUALITY, OR FITNESS FOR A PARTICULAR PURPOSE. THE USE OF THE PRODUCT BY YOU IS AT YOUR OWN RISK. IN NO EVENT WILL HIKVISION BE LIABLE TO YOU FOR ANY SPECIAL, CONSEQUENTIAL, INCIDENTAL, OR INDIRECT DAMAGES, INCLUDING, AMONG OTHERS, DAMAGES FOR LOSS OF BUSINESS PROFITS, BUSINESS INTERRUPTION, OR LOSS OF DATA, CORRUPTION OF SYSTEMS, OR LOSS OF DOCUMENTATION, WHETHER BASED ON BREACH OF CONTRACT, TORT (INCLUDING NEGLIGENCE), PRODUCT LIABILITY, OR OTHERWISE, IN CONNECTION WITH THE USE OF THE PRODUCT, EVEN IF HIKVISION HAS BEEN ADVISED OF THE POSSIBILITY OF SUCH DAMAGES OR LOSS.
YOU ACKNOWLEDGE THAT THE NATURE OF THE INTERNET PROVIDES FOR INHERENT SECURITY RISKS, AND HIKVISION SHALL NOT TAKE ANY RESPONSIBILITIES FOR ABNORMAL OPERATION, PRIVACY LEAKAGE OR OTHER DAMAGES RESULTING FROM CYBER-ATTACK, HACKER ATTACK, VIRUS INFECTION, OR OTHER INTERNET SECURITY RISKS; HOWEVER, HIKVISION WILL PROVIDE TIMELY TECHNICAL SUPPORT IF REQUIRED.
YOU AGREE TO USE THIS PRODUCT IN COMPLIANCE WITH ALL APPLICABLE LAWS, AND YOU ARE SOLELY RESPONSIBLE FOR ENSURING THAT YOUR USE CONFORMS TO THE APPLICABLE LAW. ESPECIALLY, YOU ARE RESPONSIBLE, FOR USING THIS PRODUCT IN A MANNER THAT DOES NOT INFRINGE ON THE RIGHTS OF THIRD PARTIES, INCLUDING WITHOUT LIMITATION, RIGHTS OF PUBLICITY, INTELLECTUAL PROPERTY RIGHTS, OR DATA PROTECTION AND OTHER PRIVACY RIGHTS. YOU SHALL NOT USE THIS PRODUCT FOR ANY PROHIBITED END-USES, INCLUDING THE DEVELOPMENT OR PRODUCTION OF WEAPONS OF MASS DESTRUCTION, THE DEVELOPMENT OR

PRODUCTION OF CHEMICAL OR BIOLOGICAL WEAPONS, ANY ACTIVITIES IN THE CONTEXT RELATED TO ANY NUCLEAR EXPLOSIVE OR UNSAFE NUCLEAR FUEL-CYCLE, OR IN SUPPORT OF HUMAN RIGHTS ABUSES.
IN THE EVENT OF ANY CONFLICTS BETWEEN THIS MANUAL AND THE APPLICABLE LAW, THE LATER PREVAILS.

Data Protection

During the use of device, personal data will be collected, stored and processed. To protect data, the development of Hikvision devices incorporates privacy by design principles. For example, for device with facial recognition features, biometrics data is stored in your device with encryption method; for fingerprint device, only fingerprint template will be saved, which is impossible to reconstruct a fingerprint image.
As data controller, you are advised to collect, store, process and transfer data in accordance with the applicable data protection laws and regulations, including without limitation, conducting security controls to safeguard personal data, such as, implementing reasonable administrative and physical security controls, conduct periodic reviews and assessments of the effectiveness of your security controls.

Regulatory Information

FCC Information

Please take attention that changes or modification not expressly approved by the party responsible for compliance could void the user's authority to operate the equipment.
FCC compliance: This equipment has been tested and found to comply with the limits for a Class B digital device, pursuant to part 15 of the FCC Rules. These limits are designed to provide reasonable protection against harmful interference in a residential installation. This equipment generates, uses and can radiate radio frequency energy and, if not installed and used in accordance with the instructions, may cause harmful interference to radio communications. However, there is no guarantee that interference will not occur in a particular installation. If this equipment does cause harmful interference to radio or television reception, which can be determined by turning the equipment off and on, the user is encouraged to try to correct the interference by one or more of the following measures:
—Reorient or relocate the receiving antenna.
—Increase the separation between the equipment and receiver.
—Connect the equipment into an outlet on a circuit different from that to which the receiver is connected.
—Consult the dealer or an experienced radio/TV technician for help
FCC Conditions
This device complies with part 15 of the FCC Rules. Operation is subject to the following two conditions:
1. This device may not cause harmful interference.
2. This device must accept any interference received, including interference that may cause undesired operation.

EU Conformity Statement

This product and - if applicable - the supplied accessories too are marked with "CE" and comply therefore with the applicable harmonized European standards listed

under the EMC Directive 2014/30/EU, LVD Directive 2014/35/EU, the RoHS Directive 2011/65/EU

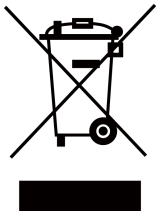

2012/19/EU (WEEE directive): Products marked with this symbol cannot be disposed of as unsorted municipal waste in the European Union. For proper recycling, return this product to your local supplier upon the purchase of equivalent new equipment, or dispose of it at designated collection points. For more information see: www.recyclethis.info

2006/66/EC (battery directive): This product contains a battery that cannot be disposed of as unsorted municipal waste in the European Union. See the product documentation for specific battery information. The battery is marked with this symbol, which may include lettering to indicate cadmium (Cd), lead (Pb), or mercury (Hg). For proper recycling, return the battery to your supplier or to a designated collection point. For more information see:www.recyclethis.info

Industry Canada ICES-003 Compliance

This device meets the CAN ICES-3 (B)/NMB-3(B) standards requirements.

Safety Instruction

These instructions are intended to ensure that user can use the product correctly to avoid danger or property loss.

The precaution measure is divided into Dangers and Cautions:

Dangers: Neglecting any of the warnings may cause serious injury or death.

Cautions: Neglecting any of the cautions may cause injury or equipment damage.

⚠	⚠
Dangers: Follow these safeguards to prevent serious injury or death.	**Cautions:** Follow these precautions to prevent potential injury or material damage.

⚠ Danger:

- In the use of the product, you must be in strict compliance with the electrical safety regulations of the nation and region.
- The equipment must be connected to an earthed mains socket-outlet.
- Shock hazard! Disconnect all power sources before maintenance.
- Do not touch the bare metal contacts of the inlets after the circuit breaker is turned off. Electricity still exists.
- ϟ indicates hazardous live and the external wiring connected to the terminals requires installation by an instructed person.
- Keep body parts away from fan blades. Disconnect the power source during servicing.
- Keep body parts away from motors. Disconnect the power source during servicing.
- To prevent possible hearing damage, do not listen at high volume levels for long periods.
- All the electronic operation should be strictly compliance with the electrical safety regulations, fire prevention regulations and other related regulations in your local region.
- Do not connect several devices to one power adapter as adapter overload may cause over-heat or fire hazard.
- Please make sure that the power has been disconnected before you wire, install or dismantle the device.
  If the top caps should be open and the device should be powered on for maintenance, make sure:
  1. Power off the fan to prevent the operator from getting injured accidentally.
  2. Do not touch bare high-voltage components.
  3. Make sure the switch's wiring sequence is correct after maintenance.
- Please make sure that the power has been disconnected before you wire, install or dismantle the device.
- When the product is installed on wall or ceiling, the device shall be firmly fixed.
- If smoke, odors or noise rise from the device, turn off the power at once and unplug the power cable, and then please contact the service center.

- Do not ingest battery, Chemical Burn Hazard.
  This product contains a coin/button cell battery. If the coin/button cell battery is swallowed, it can cause severe internal burns in just 2 hours and can lead to death.
  Keep new and used batteries away from children. If the battery compartment does not close securely, stop using the product and keep it away from children. If you think batteries might have been swallowed or placed inside any part of the body, seek immediate medical attention.
- If the product does not work properly, please contact your dealer or the nearest service center. Never attempt to disassemble the device yourself. (We shall not assume any responsibility for problems caused by unauthorized repair or maintenance.)

⚠ **Cautions:**

- The equipment shall not be exposed to dripping or splashing and that no objects filled with liquids, such as vases, shall be placed on the equipment.
- Ensure correct wiring of the terminals for connection to an AC mains supply.
- The equipment has been designed, when required, modified for connection to an IT power distribution system.
- + identifies the positive terminal(s) of equipment which is used with, or generates direct current. + identifies the negative terminal(s) of equipment which is used with, or generates direct current.
- No naked flame sources, such as lighted candles, should be placed on the equipment.
- This equipment is suitable for mounting on concrete or other non-combustible surface only.
- Install the equipment according to the instructions in this manual.
- To prevent injury, this equipment must be securely attached to the floor/wall in accordance with the installation instructions.
- Stainless steel may be corroded in some circumstances. You need to clean and care the device by using the stainless steel cleaner. It is suggested to clean the device every month.
- Do not drop the device or subject it to physical shock, and do not expose it to high electromagnetism radiation. Avoid the equipment installation on vibrations surface or places subject to shock (ignorance can cause equipment damage).
- Do not place the device in extremely hot (refer to the specification of the device for the detailed operating temperature), cold, dusty or damp locations, and do not expose it to high electromagnetic radiation.
- The device cover for indoor use shall be kept from rain and moisture.
- Exposing the equipment to direct sun light, low ventilation or heat source such as heater or radiator is forbidden (ignorance can cause fire danger).
- Do not aim the device at the sun or extra bright places. A blooming or smear may occur otherwise (which is not a malfunction however), and affecting the endurance of sensor at the same time.
- Please use the provided glove when open up the device cover, avoid direct contact with the device cover, because the acidic sweat of the fingers may erode the surface coating of the device cover.
- Please use a soft and dry cloth when clean inside and outside surfaces of the device cover, do not use alkaline detergents.

- Please keep all wrappers after unpack them for future use. In case of any failure occurred, you need to return the device to the factory with the original wrapper. Transportation without the original wrapper may result in damage on the device and lead to additional costs.
- Improper use or replacement of the battery may result in hazard of explosion. Replace with the same or equivalent type only. Dispose of used batteries according to the instructions provided by the battery manufacturer.
- Biometric recognition products are not 100% applicable to anti-spoofing environments. If you require a higher security level, use multiple authentication modes.
- Do not stay in the lane when the device is rebooting.
- RISK OF EXPLOSION IF BATTERY IS REPLACED BY AN INCORRECT TYPE. DISPOSE OF USED BATTERIES ACCORDING TO THE INSTRUCTIONS.
- SUITABLE FOR MOUNTING ON CONCRETE OR OTHER NON-COMBUSTIBLE SURFACE ONLY.
- The instructions shall require connection of the equipment protective earthing conductor to the installation protective earthing conductor.

Available Models

Product Name	Model	Description
Swing Barrier	DS-K3B411X-L	Left Pedestal
	DS-K3B411X-M	Middle Pedestal
	DS-K3B411X-R	Right Pedestal
	DS-K3B411X-LS	Left Pedestal (No Barrier)
	DS-K3B411X-MS	Middle Pedestal (Single Barrier)

Scan the QR code to get User Manual of Swing Barrier. Note that mobile data charges may apply if Wi-Fi is unavailable.

Figure 1-1 QR Code

Contents

Chapter 1 Overview 1
1.1 Introduction 1
1.2 Main Features 1
Chapter 2 System Wiring 3
Chapter 3 Installation 6
3.1 Disassemble Pedestals 6
3.2 Install Pedestals 6
Chapter 4 General Wiring 11
4.1 Components Introduction 11
4.2 Wiring Electric Supply 12
4.3 Wire Interconnecting Cable 13
4.3.1 Pull Interconnecting Cable 14
4.4 Wire Network Switch (Optional) 18
4.5 Terminal Description 20
4.5.1 Main Control Board Terminal Description 20
4.5.2 Sub Control Board Terminal Description 21
4.5.3 BUS Terminal Description 21
4.5.4 Access Control Board Terminal Description 23
4.5.5 Access Control Board Serial Port ID Description 28
4.5.6 RS-485 Wiring 33
4.5.7 RS-232 Wiring 34
4.5.8 Barrier Control Wiring 34
4.5.9 Alarm Output Wiring 36
Chapter 5 Device Settings 37
5.1 Pair Keyfob (Optional) 37
5.2 Initialize Device 38

5.3 Switch Relay Output Mode (NO/NC) 39
5.3.1 Barrier Control Relay Output Mode 39
5.3.2 Alarm Relay Output Mode (NO/NC) 40
Chapter 6 Activation 42
6.1 Activate via SADP 42
6.2 Activate Device via Client Software 43
Appendix A. DIP Switch Description 45
Appendix B. Event and Alarm Type 46
Appendix C. Table of Audio Index Related Content 47
Appendix D. Error Code Description 48
Appendix E. Communication Matrix and Device Command 50

Chapter 1 Overview

1.1 Introduction

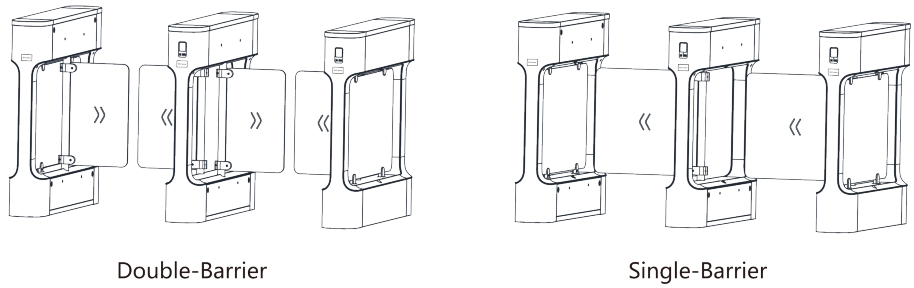

Figure 1-1 Appearance

The swing barrier is designed to detect unauthorized entrance or exit. By adopting the swing barrier integratedly with the access control system, personnel should authenticate to pass through the lane via swiping IC or ID card, scanning QR code, etc. It is widely used in attractions, stadiums, construction sites, residences, etc.

1.2 Main Features

- Excellent performance and fast speed with 32-bit high-speed processor
- TCP/IP network communication and network speed adaptive
  The communication data is specially encrypted to relieve the concern of privacy leak
- Permissions validation and anti-tailgating
- Remaining open/closed mode selectable
- Bidirectional (Entering/Exiting) lane
  The barrier opening and closing speed can be configured according to the visitor flow
- The barrier will be locked or stop working when people are nipped
- Anti-forced-accessing
  The barrier will be locked automatically without open-barrier signal. It can bear the force of up to 50 N·m
- Self-detection, Self-diagnostics, and automatic alarm
- Audible and visual alarm will be triggered when detecting intrusion, tailgating, reverse passing, and climbing over barrier
- IP conflict detection
- Remote control and management
- Online/offline operation
- LED indicates the entrance/exit and passing status
- Barrier is in open status when powered down; If the device is installed with supercapacitor, the barrier remains open when powered down
- Fire alarm passing

When the fire alarm is triggered, the barrier will be open automatically for emergency evacuation

- Valid passing duration settings
  System will cancel the passing permission if a person does not pass through the lane within the valid passing duration
- Opens/Closes barrier according to the schedule template
- Up to 60,000 cards can be added
- Up to 180,000 card swiping records can be saved

Chapter 2 System Wiring

The preparation before installation and general wiring.

Steps

1. Draw a central line on the installation surface of the left or right pedestal.
2. Draw other parallel lines for installing the other pedestals.

Note

The distance between the nearest two line is L+200 mm. L represents the lane width.

3. Slot on the installation surface and dig installation holes according to the hole position diagram.

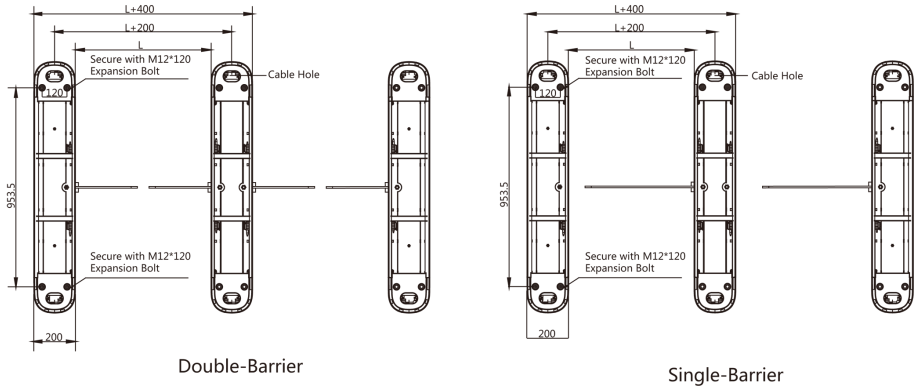

Figure 2-1 Hole Position Diagram

4. Bury cables. Each lane buries 1 network cable and 1 high voltage cable. For details, see the system wiring diagram below.

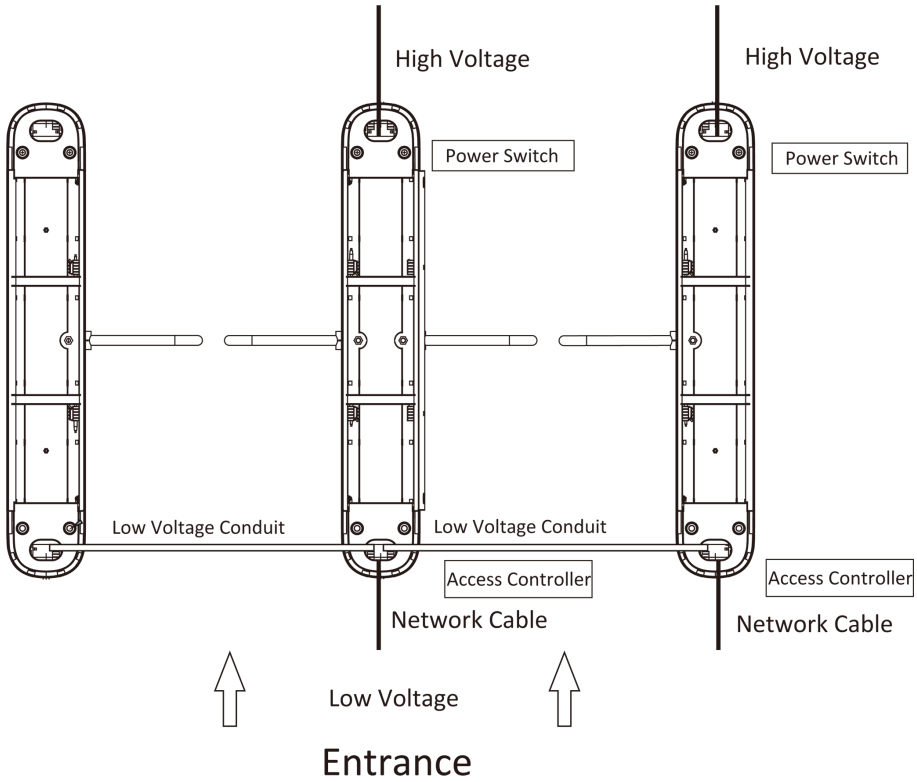

Figure 2-2 System Wiring Diagram (General Wiring)

Note

- The supplied interconnecting cable length is 3.75 m. If you need a longer one, you can buy a new accessory.
- The suggested inner diameter of the low voltage conduit is larger than 30 mm.
- If you want to bury both of the AC power cord and the low voltage cable at the entrance, the two cables should be in separated conduits to avoid interference.
- If more peripherals are required to connect, you should increase the conduit diameter or bury another conduit for the external cables.
- The external AC power cord should be double-insulated.
- The network cable must be CAT5e or the network cable has better performance. And the suggested network cable length should be less than 100 m.

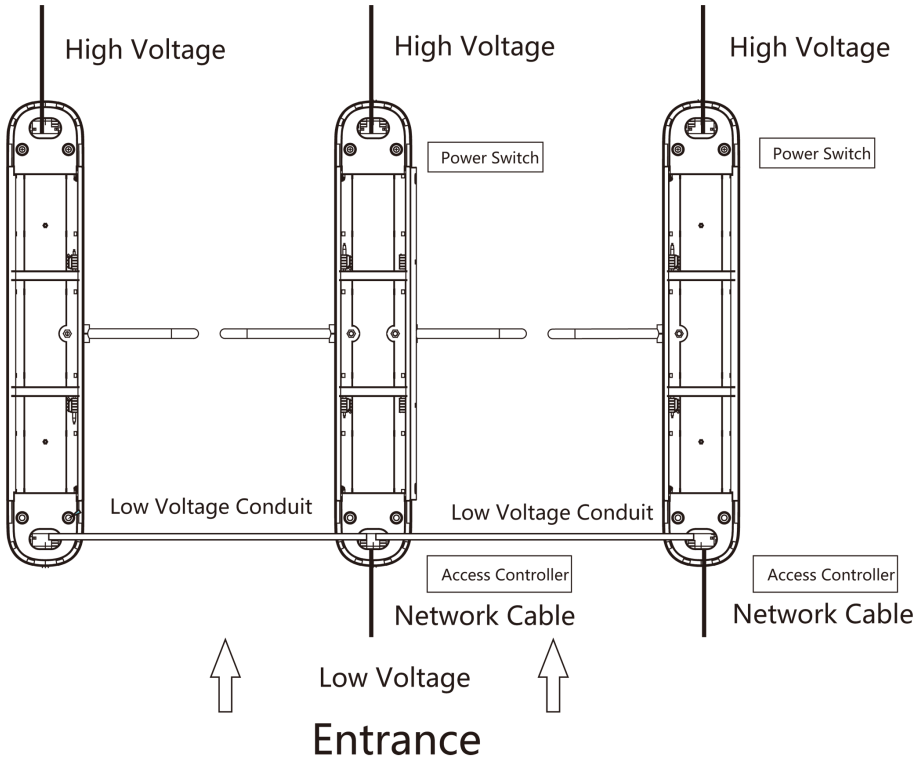

Figure 2-3 Wire Face Recognition Terminal

Note

- The face recognition terminal installed on the left pedestal will gain power from the sub switch, which should connect to high voltage.
- The suggested inner diameter of the low voltage conduit is larger than 30 mm.
- The supplied interconnecting cable length is 3.75 m. If you need a longer one, you can extend the cable by yourself.
- If you want to bury both of the AC power cord and the low voltage cable at the entrance, the two cables should be in separated conduits to avoid interference.
- If more peripherals are required to connect, you should increase the conduit diameter or bury another conduit for the external cables.
- The external AC power cord should be double-insulated.
- The network cable must be CAT5e or the network cable has better performance. And the suggested network cable length should be less than 100 m.

Chapter 3 Installation

3.1 Disassemble Pedestals

Before installation, you should use the key to open the pedestals.
View the pictures below to find the lock holes.

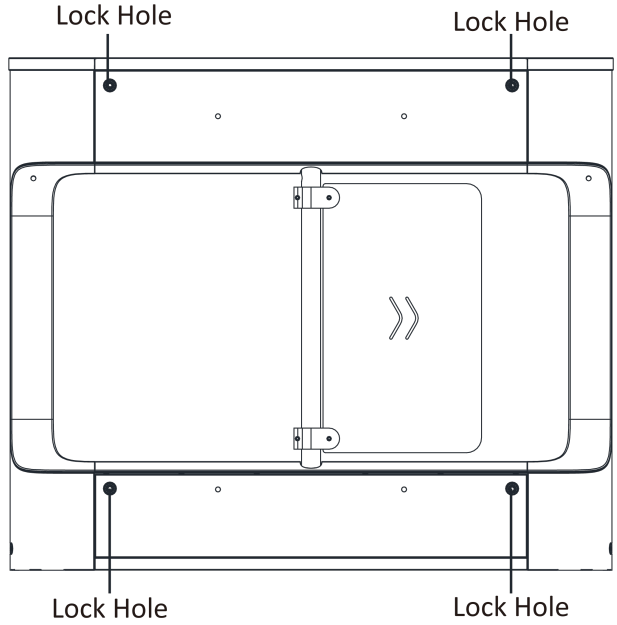

Figure 3-1 Lock Holes

3.2 Install Pedestals

Before You Start
Prepare for the installation tools, check the device and the accessories, and clear the installation base.

Steps

Note

- The device should be installed on the concrete surface or other non-flammable surfaces.
- In order to prevent stainless steel from rusting due to dirt during the construction process, it is recommended to tear off the protective film after the device is installed. There may be residual glue at the film cutting position, and it is recommended to wipe the film with WD-40 protective liquid after tearing the film.

- No face recognition terminal installed: If the installation area is too close to the wall, make sure the distance between the pedestal and the wall should be more than 20 mm, or the surface may be scratched.

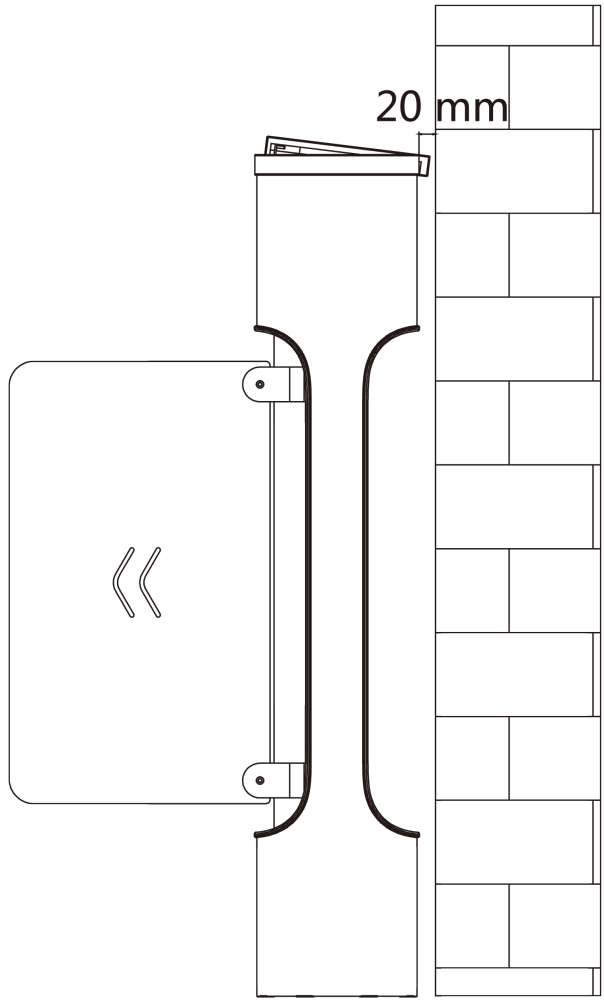

Figure 3-2 Installation Distance (Without Face Recognition Terminal)

- Face recognition terminal installed: If the installation area is too close to the wall, make sure the distance between the pedestal and the wall should be more than 20 mm, or the surface may be scratched.

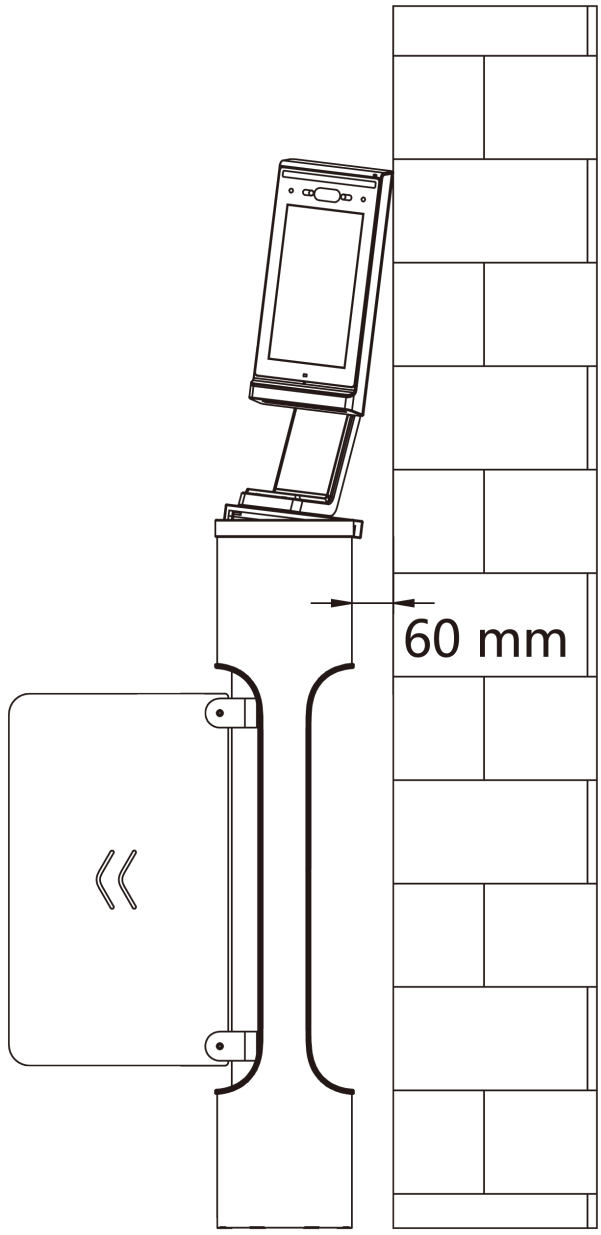

Figure 3-3 Installation Distance (With Face Recognition Terminal)

The dimension is as follows.

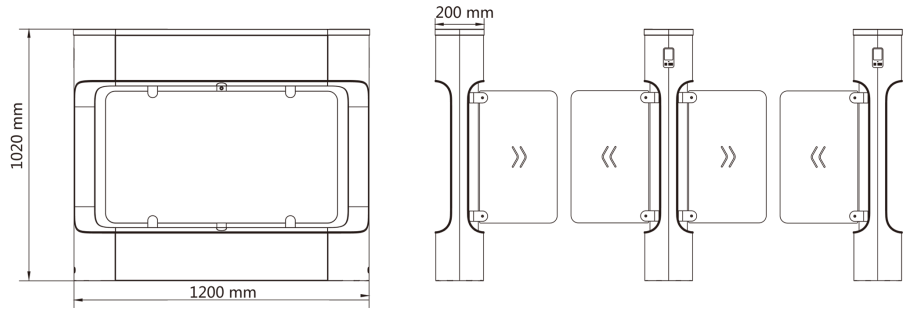

Figure 3-4 Double-Barrier Dimension

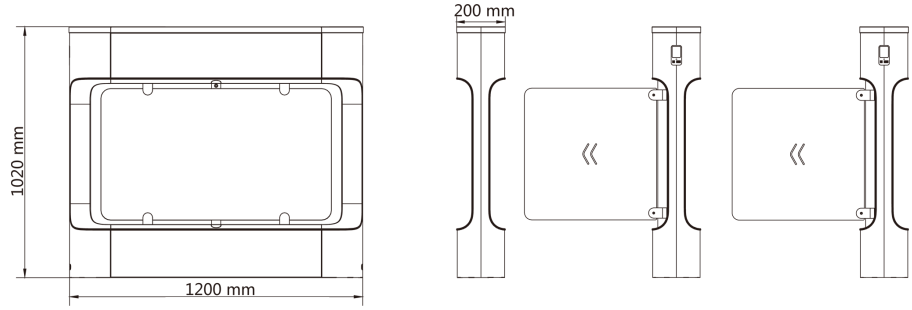

Figure 3-5 Single-Barrier Dimension

1. Prepare for the installation tools, check the components, and prepare for the installation base.
2. Drill holes on the ground according to the installation holes on the pedestals and insert the expansion sleeves.
3. Seal the bottom of the turnstile to avoid water from entering.
4. According to the entrance and exit marks on the pedestals, move the pedestals to the corresponded positions.

Note

Make sure the installation holes on the pedestals and the base are aligned with each other.

5. Secure the pedestals with expansion bolts.

Note

- Do not immerse the pedestal in the water. In special circumstances, the immersed height should be no more than 150 mm.
- The installation footprint is as follows:

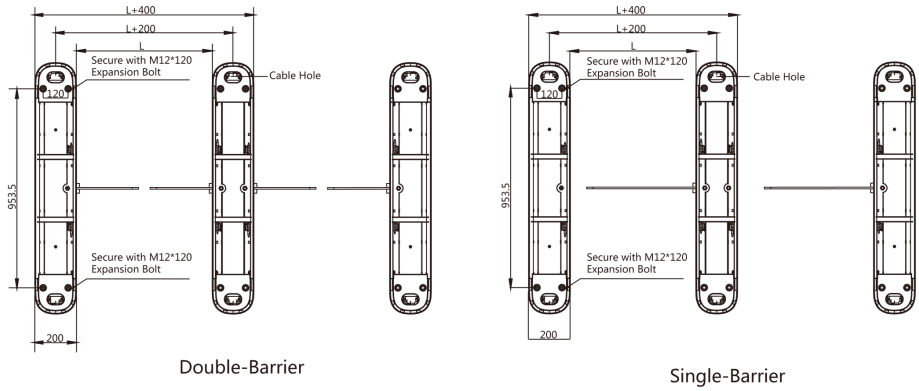

Figure 3-6 Installation Footprint

Chapter 4 General Wiring

4.1 Components Introduction

By default, basic components of the turnstile are connected well. The pedestals can communicate by wiring the interconnecting cables. And the turnstile supports wiring the AC electric supply for the whole system's power supply.

Note

The voltage fluctuation of the electric supply is between 85 VAC and 264 VAC, 50 to 60 Hz.

The picture displayed below describes each component's position on the turnstile.

Note

The diagram is for reference only.

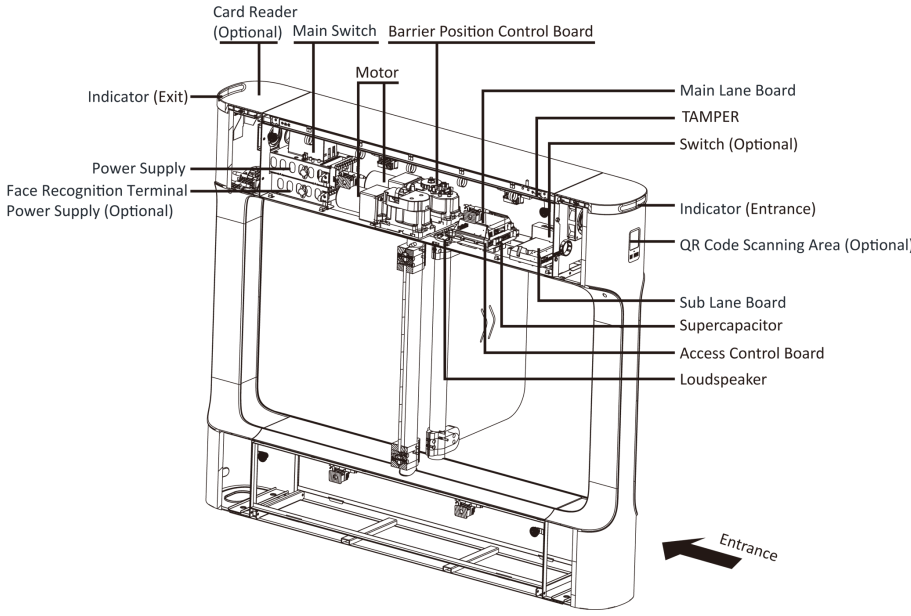

Figure 4-1 Components Diagram 1

Note

The reinstalled supercapacitor needs to be powered on for at least 3 minutes before it can work normally.

The picture displayed below describes the IR adapter and the IR sending/receiving board and their corresponding number on the pedestal.

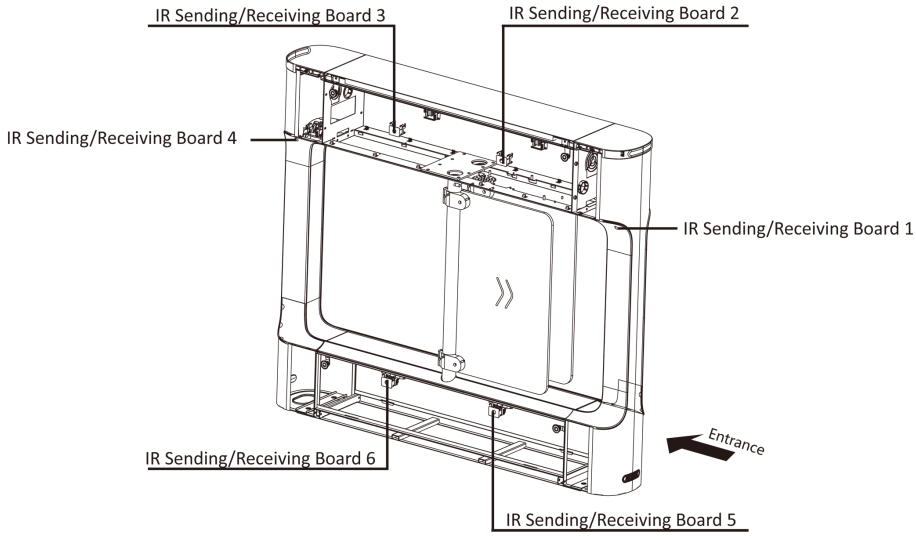

Figure 4-2 Components 2

Note

- If the turnstile contains two lanes, standing at the entrance position, the IR boards on the left pedestal are the IR sending boards. The IR boards on the right pedestal are the IR receiving boards. The IR boards on the left side of the middle pedestal are the IR receiving boards, while the IR boards on the right side of the middle pedestal are the IR sending boards.
- Warning tags can be viewed on the side panel of each pedestal.
- Safety Instructions can be viewed on the middle panel inside the pedestal.

4.2 Wiring Electric Supply

Wire electric supply with the switch in the pedestal. Terminal L and terminal N are on the switch, while terminal PE should connect to a ground wire (yellow and green wire).

Before wiring, open the protective cover outside the switch.

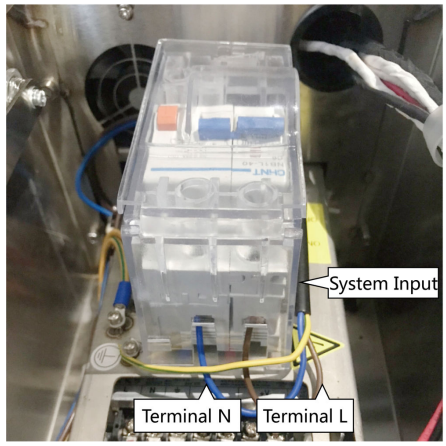

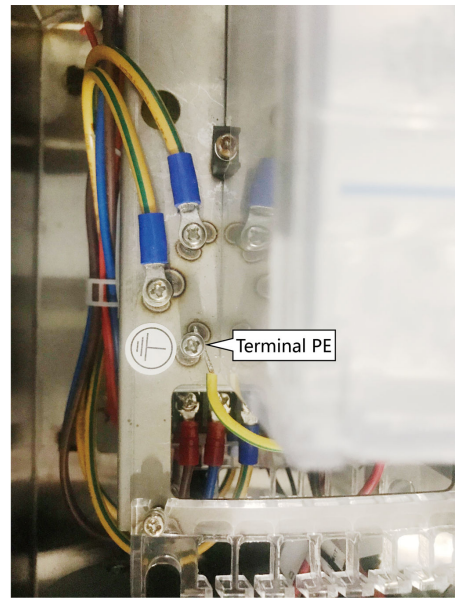

Note

- The cable bare part should be no more than 8 mm. It is suggested that you can immerse the bare part into the liquid tin. If possible, wear an insulation cap at the end of the bare cable. Make sure there's no bare copper or cable after the wiring.
- The Terminal L and the Terminal N cannot be wired reversely. Do not wire the input and output terminal reversely.
- To avoid people injury and device damage, when testing, the ground resistance of the equipotential points should not be larger than 2 Ω.

4.3 Wire Interconnecting Cable

You should use interconnecting cables to connect the main lane board and the sub lane board for components communication.

The picture displayed below describes the cable hole's position on the pedestals.

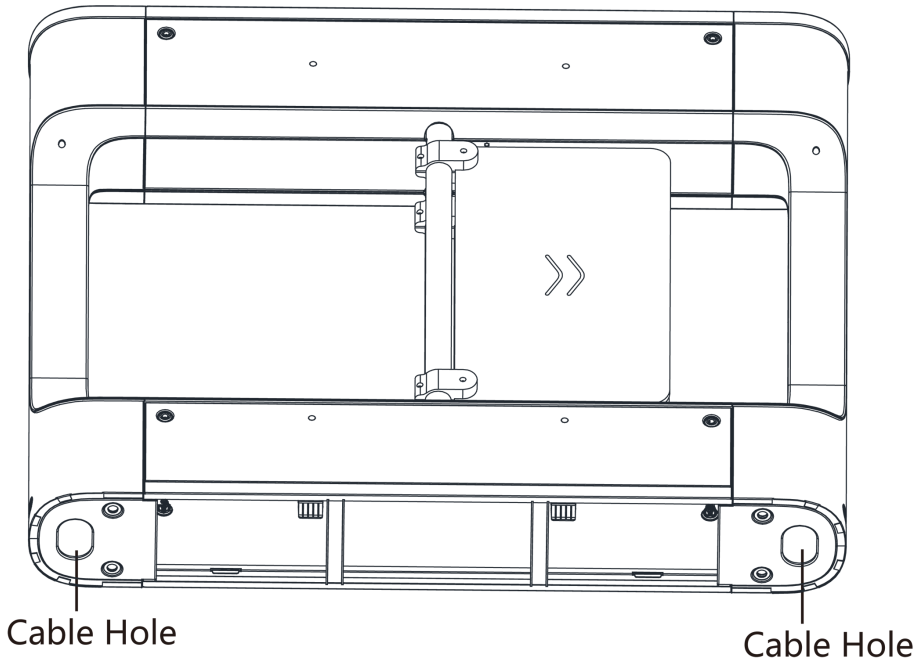

Figure 4-3 Cable Hole of Interconnecting Cable

Follow the instructions below to connect the interconnecting cable.

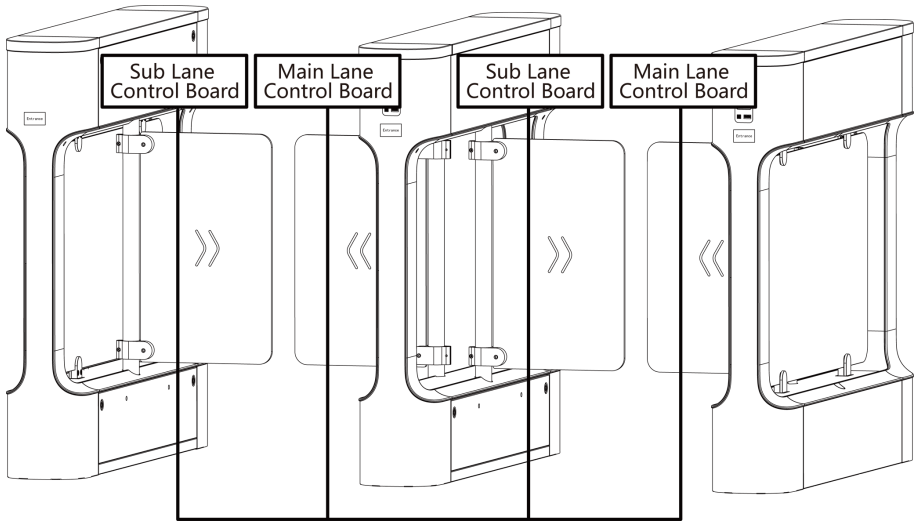

Figure 4-4 Connect Interconnecting Cable

4.3.1 Pull Interconnecting Cable

Steps

1. Use the key to unlock the upper lock of the pedestals and remove the top cover.

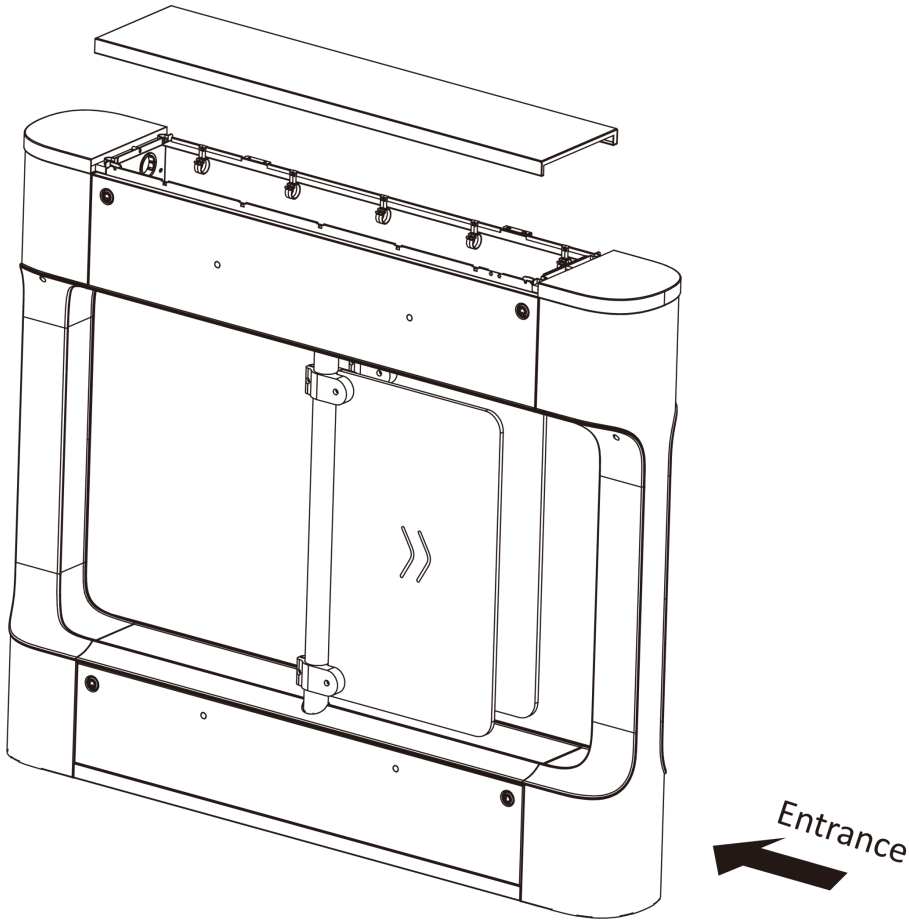

Figure 4-5 Dissemble Top Cover

2. Dissemble the card presenting board.

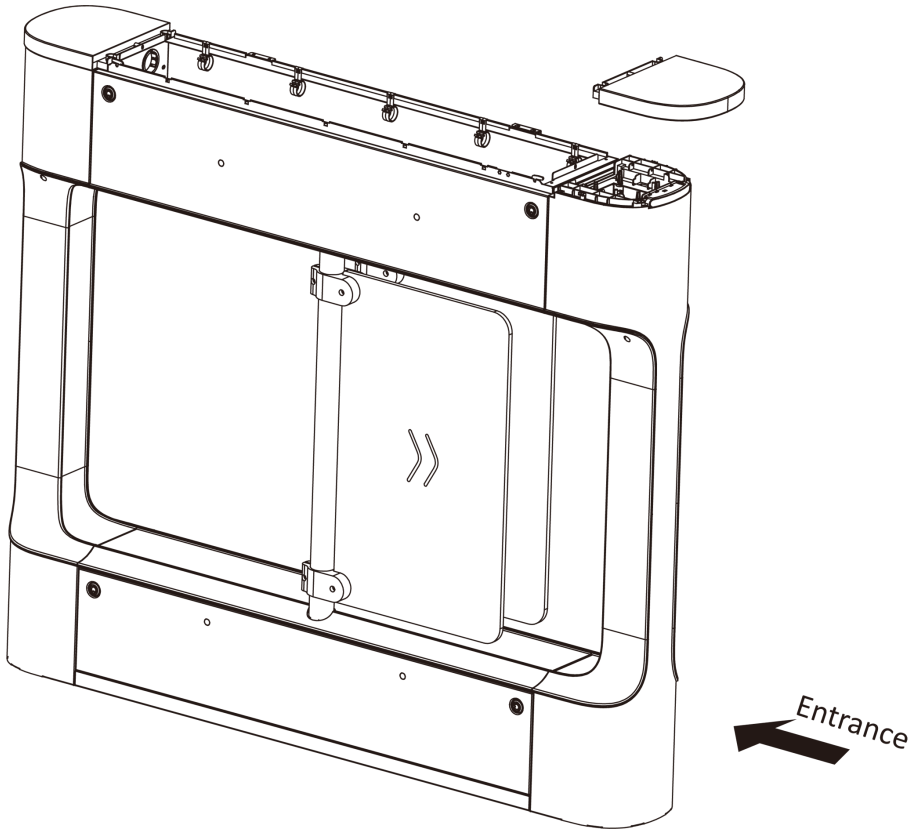

Figure 4-6 Dissemble Card Presenting Board

3. Dissemble the card reader module.

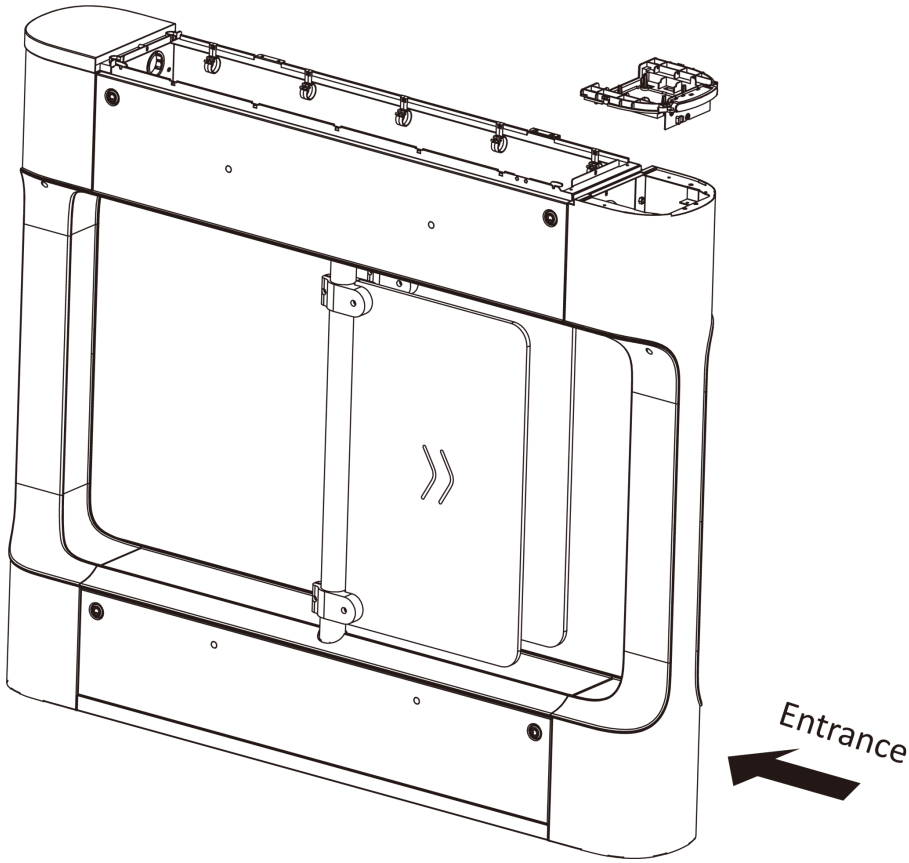

Figure 4-7 Dissemble Card Reader Module

4. Pull the interconnecting cable out from the bottom up with pull-out tool, and other wiring operations can be performed.

Note

Interconnecting cable includes a network cable and a power supply cable of 24 V.

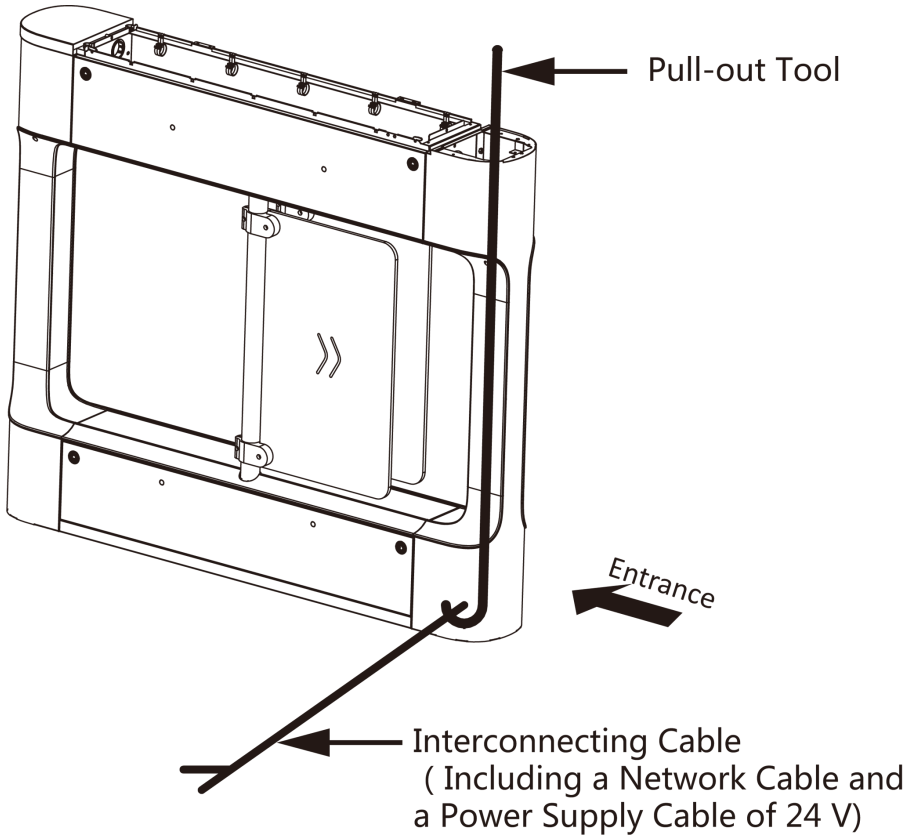

Figure 4-8 Pull out Interconnecting Cable

4.4 Wire Network Switch (Optional)

Connect the network cable and the network switch.

Steps

1. Use the key to open the top cover of the pedestal.

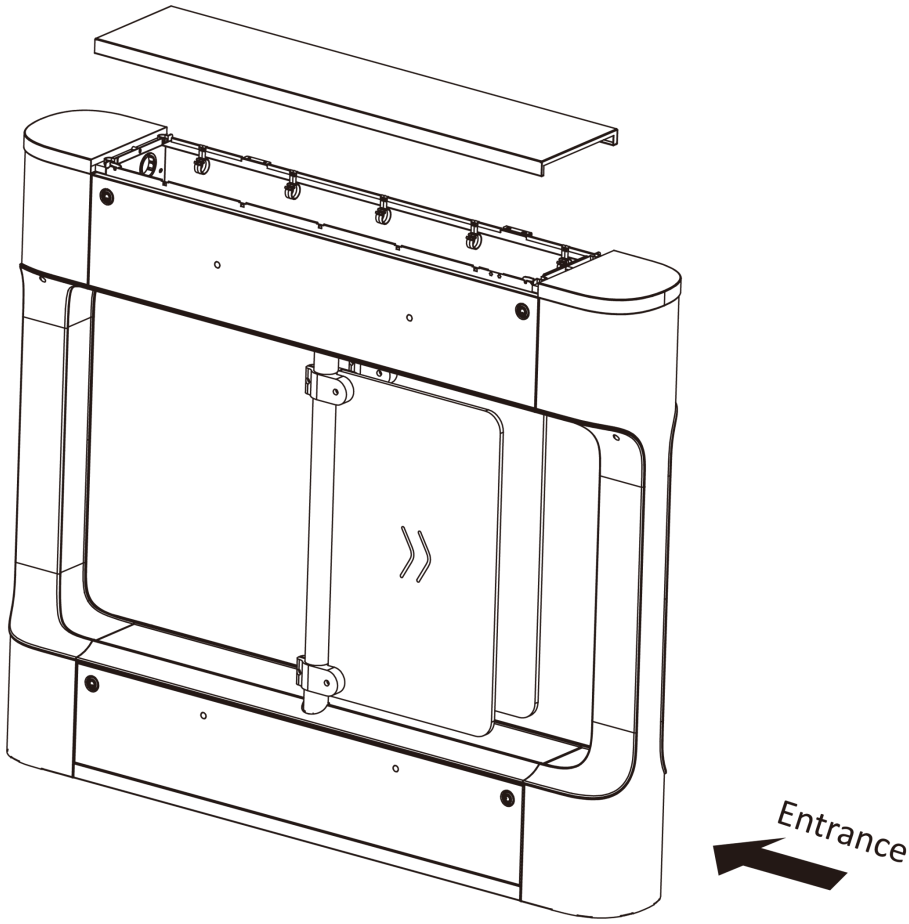

Figure 4-9 Open Top Cover

2. Attach the network switch to the position shown in the figure with adhesive.

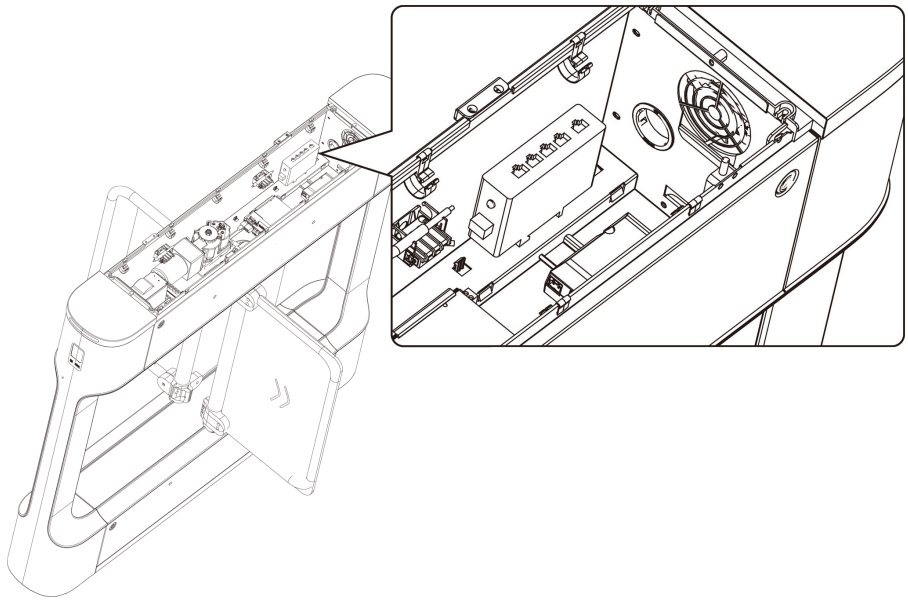

Figure 4-10 Network Switch Position

3. Lead out the 12 V power supply from the power switch and connect it to the switch power interface.
4. Connect the network cable according to your actual needs.

4.5 Terminal Description

The lane controller contains main lane controller and sub lane controller, which controls the IR beams, motor, and other components' work.

4.5.1 Main Control Board Terminal Description

The main lane control board contains power input, BUS interface, interconnecting interface, supercapacitor interface, IR interface, barrier position control board interface and motor drive interface.

The picture displayed below is the main control board diagram.

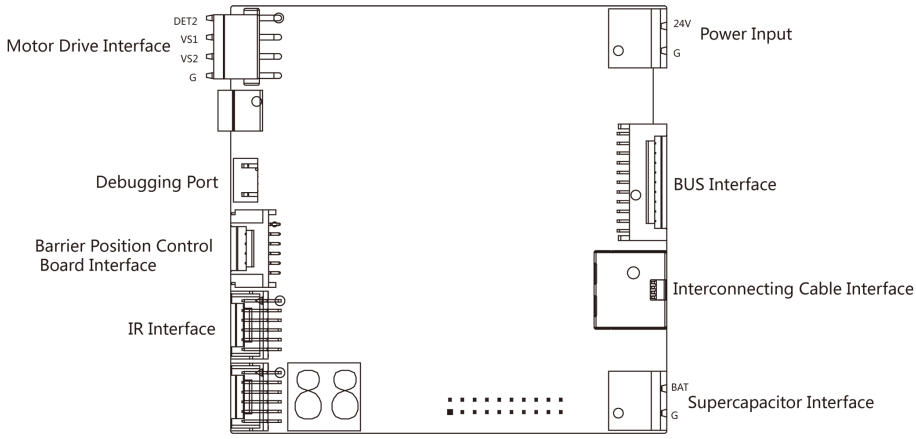

Figure 4-11 Main Control Board Terminal

4.5.2 Sub Control Board Terminal Description

The sub lane control board contains power input, BUS interface, interconnecting interface, supercapacitor interface, IR interface, barrier position control board interface and motor drive interface.

The picture displayed below is the sub control board diagram.

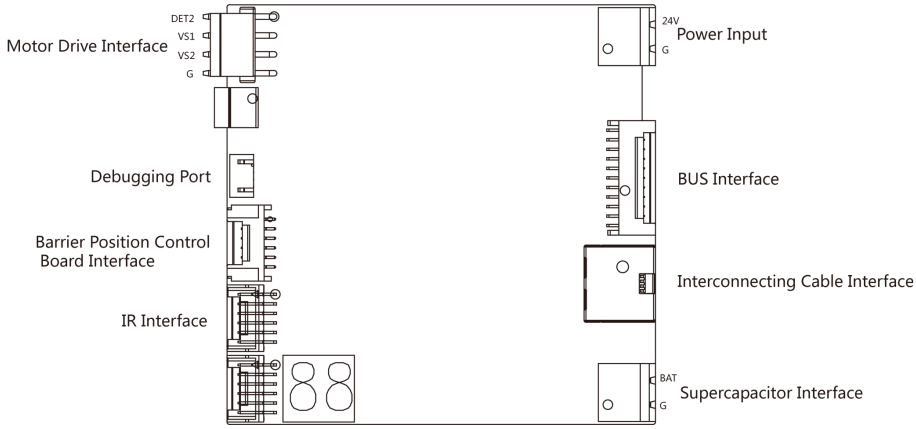

Figure 4-12 Sub Control Board Terminal

4.5.3 BUS Terminal Description

You can connect the lane controller light board, fan, TAMPER, lane control board, card reader, face recognition terminal, QR code scanner, etc. via the BUS terminal.

Note

Part of the wiring has been completed at the factory, please connect according to actual needs.

Table 4-1 BUS Terminal in Main Lane Controller

Terminal Name	Description
Lane Controller Light Board 1	Connects lane controller light board 1
Lane Controller Light Board 2	Connects lane controller light board 2
Fan 1	Connects fan 1
Fan 2	Connects fan 2
TAMPER	Connects TAMPER
Lane Controller Board	Connect sub lane controller board
5 V	Reserved
Port 1 **Note** External card reader is recommended to access.	Red 12 V: connects 12 VDC power supply terminal
	Yellow 485A/232A+: card reader RS-485A+/RS-232A+ access terminal
	Blue 485A/232A-: card reader RS-485A-/RS-232A- access terminal
	Black GND: grounding

Table 4-2 BUS Terminal in Sub Lane Controller (Left Pedestal)

Terminal Name	Description
Lane Controller Light Board 1	Connects lane controller light board 1
Lane Controller Light Board 2	Connects lane controller light board 2
Fan 1	Connects fan 1
Fan 2	Connects fan 2
TAMPER	Connects TAMPER
Lane Controller Board	Connect main lane controller board
Port 5 **Note** External card reader is recommended to access.	Red 12 V: connects 12 VDC power supply terminal
	Yellow 485E/232E+: card reader RS-485E+/RS-232E+ access terminal
	Blue 485E/232E-: card reader RS-485E-/RS-232E- access terminal
	Black GND: grounding
Port 6	Red 12 V: connects 12 VDC power supply terminal
	Yellow 485F/232F+: card reader RS-485F+/RS-232F+ access terminal

Terminal Name	Description
Note External face recognition terminal is recommended to access.	Blue 485F/232F-: card reader RS-485F-/RS-232F- access terminal
	Black GND: grounding

Table 4-3 BUS Terminal in Sub Lane Controller (Middle Pedestal)

Terminal Name	Description
Lane Controller Light Board 1	Connects lane controller light board 1
Lane Controller Light Board 2	Connects lane controller light board 2
Lane Controller Board	Connect main lane controller board
Port 5 **Note** External card reader is recommended to access.	Red 12 V: connects 12 VDC power supply terminal
	Yellow 485E/232E+: card reader RS-485E+/RS-232E+ access terminal
	Blue 485E/232E-: card reader RS-485E-/RS-232E- access terminal
	Black GND: grounding
Port 6 **Note** External face recognition terminal is recommended to access.	Red 12 V: connects 12 VDC power supply terminal
	Yellow 485F/232F+: card reader RS-485F+/RS-232F+ access terminal
	Blue 485F/232F-: card reader RS-485F-/RS-232F- access terminal
	Black GND: grounding

4.5.4 Access Control Board Terminal Description

Access control board is mainly used for authority identification, external device accessing, and communication with the upper platform and lane controller.

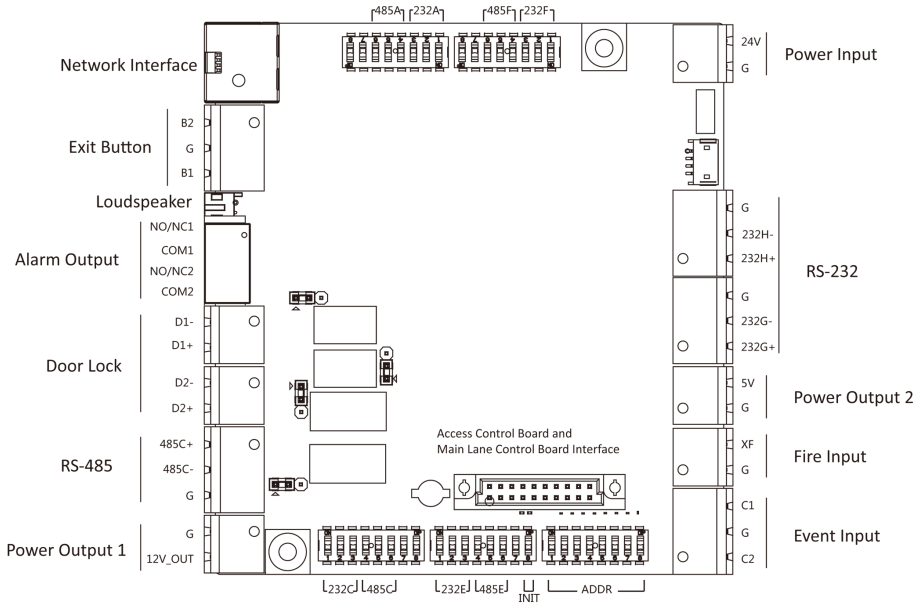

Figure 4-13 Access Control Board Terminal

Table 4-4 Access Control Board Terminal Description

Access Control Board Terminal Description			
Power Output 1	+12 V	12 VDC Power Output	/
	G	Grounding	
RS-485 Interface	RS-485 C+	Connect to Card Reader RS485+	• RS-485 card reader ID factory DIP is 1 and 3. 1 represents the passage entrance, and 3 represents the passage exit. UART 1 in the main control board corresponds to the entrance card reader, and UART 5 in the main
	RS-485 C-	Connect to Card Reader RS485-	
	GND	Grounding	

Access Control Board Terminal Description			
			control board corresponds to the exit card reader. • If the user has configured a guest card, the exit needs to be connected to two card readers, one with the DIP 4 and the other with the DIP 3. The card reader 3 and the card receiver are used together, the ordinary user swipes the card on the card reader 4, and the guest user swipes the card on the card reader 3. • This is the RS-485 interface, which cannot be switched by dialing.
Power Output 2	5 V	5 VDC Power Output	/
	G	Grounding	

Access Control Board Terminal Description			
RS-232 Interface	G	Grounding	• This is the RS-232 interface, which cannot be switched by dialing. • By default, there is no QR code scanner on the left pedestal of the device entrance. If you need to connect an additional QR code scanner, you need to connect it through the RS-232 interface here. After the cable is connected to the RS-232 interface, it passes through the embedded pipe and connects with the QR code on the left.
	RS-232 G-	Connect to RS-232G-	
	RS-232 G+	Connect to Card Reader RS-232G+	
	G	Grounding	
	RS-232 H-	Connect to RS-232H-	
	RS-232 H+	Connect to Card Reader RS-232H+	
Power Input	+24 V	24 VDC Power Input	/
	GND	Grounding	

Access Control Board Terminal Description			
Event Input	C1	Event Alarm Input 1	The event alarm input hardware interface is remaining open, and only supports access to remaining open signals, which can be linked to the host buzzer output, card reader buzzer output, alarm relay output, door open relay output, etc.
	G	Grounding	
	C2	Event Alarm Input 2	
Exit Button	B2	Door 2 Signal Input	/
	G	Grounding	
	B1	Door 1 Signal Input	
Door Lock (Relay)	D1-	Door 1 Relay Output (Dry Contact)	If necessary, the door lock relay can be used to control the third-party barrier switch. D1 controls the door opening for ordinary entrance, and D2 controls the door opening for ordinary exit.
	D1+		
	D2-	Door 2 Relay Output (Dry Contact)	If necessary, the door lock relay can be used to control
	D2+		

Access Control Board Terminal Description			
			the third-party barrier switch. D1 controls the door opening for ordinary entrance, and D2 controls the door opening for ordinary exit.
Alarm Output	NO/NC1	Alarm Output Relay 1 (Dry Contact)	The alarm output supports switch output.
	COM1		
	NO/NC2	Alarm Output Relay 2 (Dry Contact)	The alarm output supports switch output.
	COM2		
Loudspeaker	/	Connect to loudspeaker	/
Network Interface	LAN	Network Accessing	/
Fire Input	XF	Fire input	/
	G	Grounding	

Note

- You can swtich between RS-485 and RS-232 via the DIP switch on the access control board. For details about DIP switch and swiching method, see ***Access Control Board Serial Port ID Description*** .
- For details about DIP switch operation, see ***DIP Switch Description*** .

4.5.5 Access Control Board Serial Port ID Description

You can set the device mode, switch the communication mode of the corresponding UART, and initialize the device through the DIP on the access control board.

The DIP switch of the access control board is shown in the figure below:

Note

The diagram is for reference only.

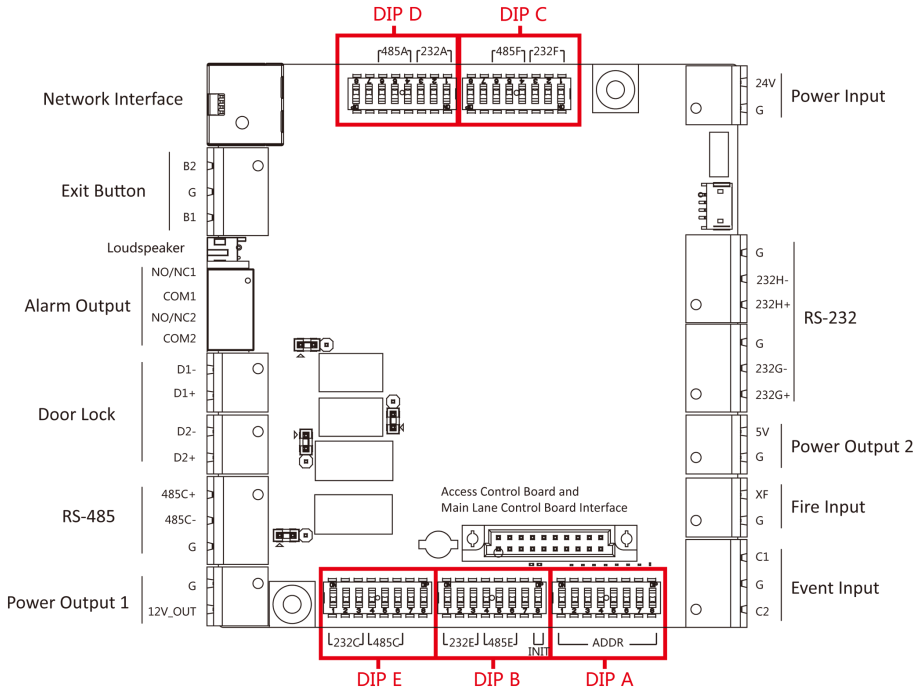

Figure 4-14 DIP Switch on Access Control Board

DIP A can set the device mode, DIP 2 to 5 can set the RS-485/RS-232 interface, and DIP B can also be used to initialize the device.

The UART corresponding to the DIP Switch is shown in the figure below:

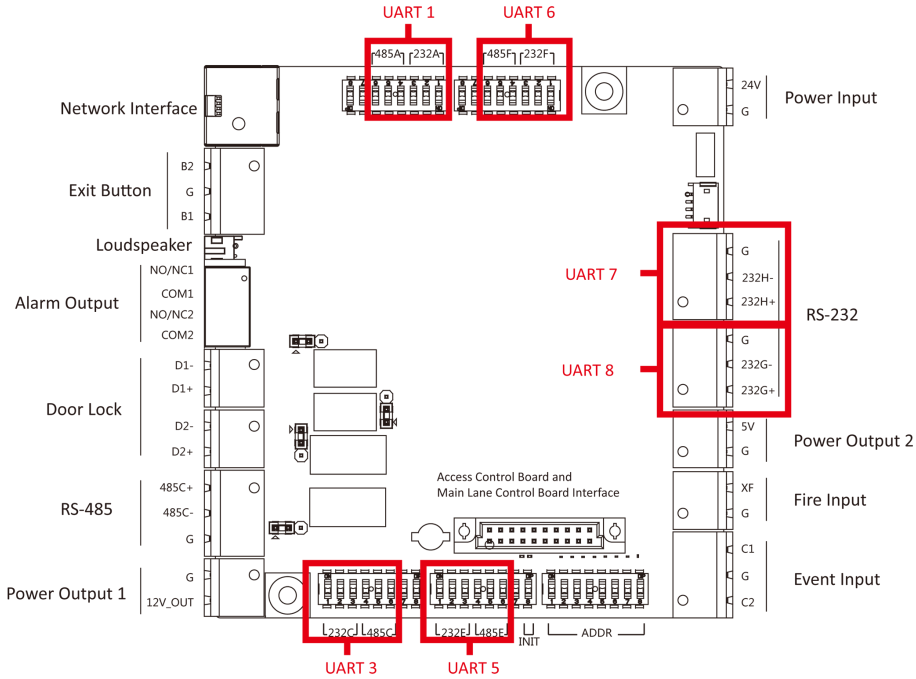

Figure 4-15 UART No. Description

The corresponding functions of different DIP Switch are described as follows:

No.	Device Mode	UART No.	Function	Binary Value
DIP A	1 to 2: Work Mode	/	Normal Mode	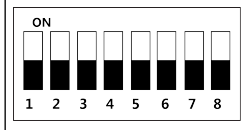
			Test Mode	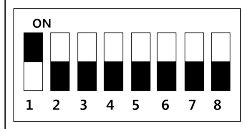
	3: Memory Mode		Enable Memory Mode	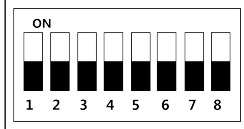
			Disable Memory Mode	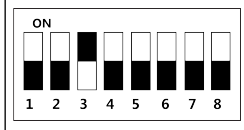
	4: Keyfob Paring Mode		Enable Keyfob Paring Mode	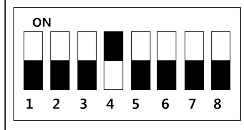
			Disable Keyfob Paring Mode	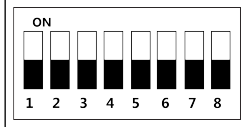
	5 to 8: Passing Mode		Controlled Bi-direction	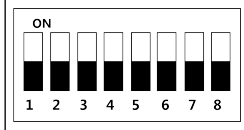
			Controlled Entrance and Prohibit Exit	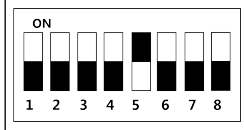
			Controlled Entrance and Free Exit	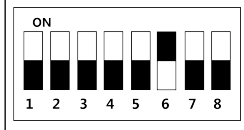
			Free Bi-direction	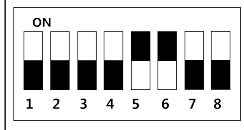
			Free Entrance and Controlled Exit	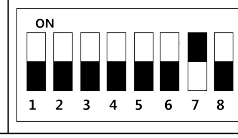

No.	Device Mode	UART No.	Function	Binary Value
			Free Entrance and Prohibit Exit	
			Prohibited Bi-direction	
			Prohibit Entrance and Controlled Exit	
			Prohibit Entrance and Free Exit	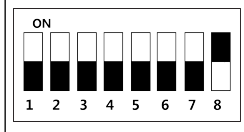
DIP B	1 to 3	UART 5	ON: UART 5 is RS-232E Interface	/
	4 to 6		ON: UART 5 is RS-485E Interface	/
	7	/	Reserved	/
	8	/	Default is OFF. You can dial to ON for initial operation	/
DIP C	1 to 3	UART 6	ON: UART 6 is RS-232F Interface	/
	4 to 6		ON: UART 6 is RS-485F Interface	/
	7	/	Reserved	/
	8	/	Reserved	/
DIP D	1 to 3	UART 1	ON: UART 1 is RS-232A Interface	/
	4 to 6		ON: UART 1 is RS-485A Interface	/
	7	/	Reserved	/
	8	/	Reserved	/
DIP E	1 to 3	UART 3	ON: UART 3 is RS-232C Interface	/

No.	Device Mode	UART No.	Function	Binary Value
	4 to 6		ON: UART 3 is RS-485C Interface	/
	7	/	Reserved	/
	8	/	Reserved	/

Note

Switch 1 to 3, 4 to 6, 7, and 8 of DIP B, DIP C, DIP D, and DIP E cannot be turned ON at the same time.

The reserved UART terminal positions in the turnstile and their corresponded UART No. are as follows:

Note

The diagram is for reference only.

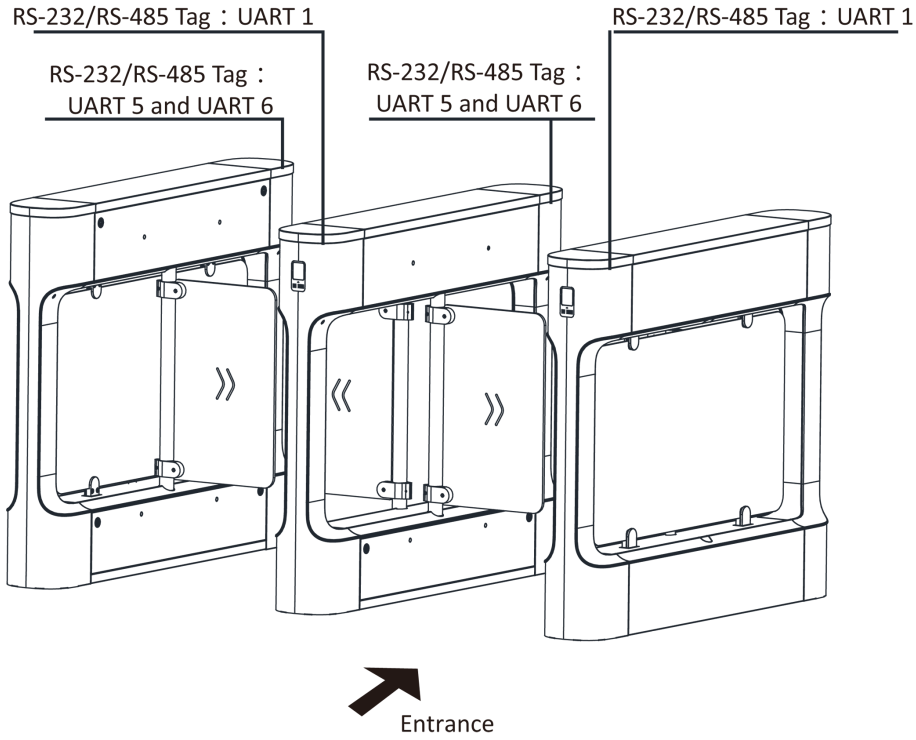

Figure 4-16 Interface and Corresponded UART No.

4.5.6 RS-485 Wiring

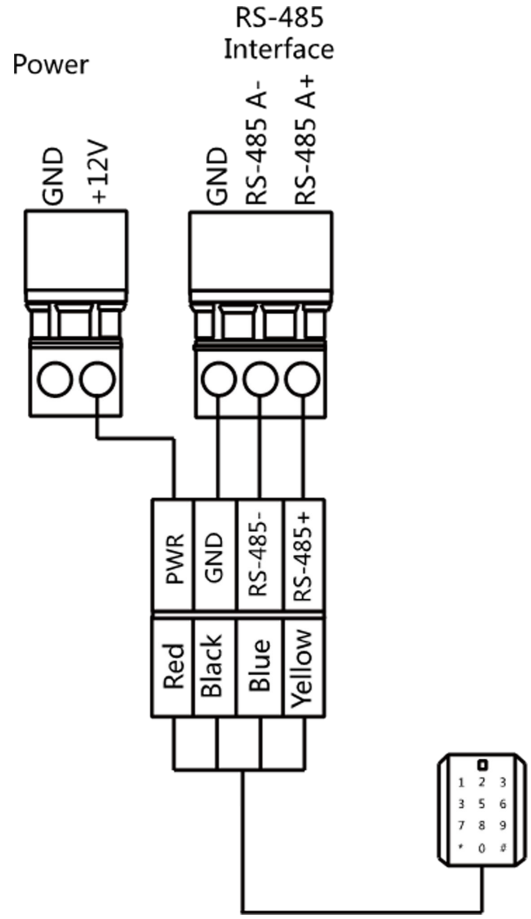

Note

- The RS-485 interfaces are for connecting ID card reader, IC card reader, QR code scanner, card reader, card recycler, text screen, and face recognition terminal. Take the wiring of RS-485 card reader as an example.
- For details about text screen, see *Configuring Screen Parameters* in *User Manual of iVMS-4200 AC Client Software*.

4.5.7 RS-232 Wiring

Note

- Access control board of pedestal can connect QR code scanner, card recycler, text screen and face recognition terminal via RS-232 interface.
- For details about text screen, see *Configuring Screen Parameters* in *User Manual of iVMS-4200 AC Client Software*.
- Take the wiring of text screen as an example.

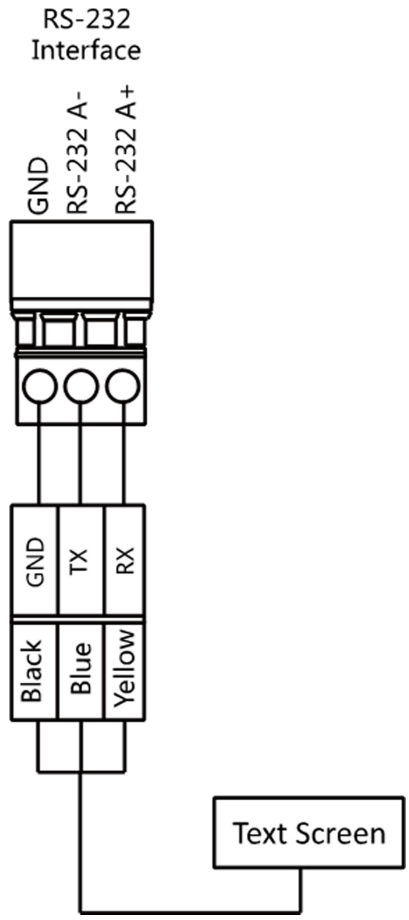

4.5.8 Barrier Control Wiring

By default, the barrier has connected with the access control board. The lane control board can control the barrier status. If possible, the device can connect with a third party lane control board to control the third party barriers. Interface D1 controls barrier opening for entrance, while interface D2 controls barrier opening for exit.

Note

Use the jumper cap to switch the relay status. For details, see ***Barrier Control Relay Output Mode*** .

Entering Wiring

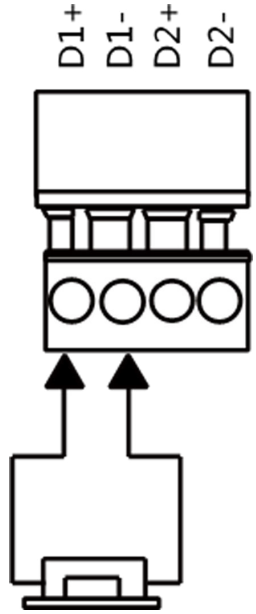

Exiting Wiring

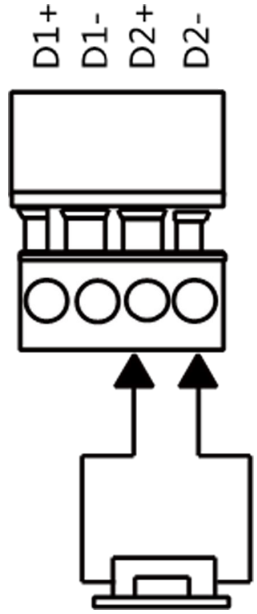

4.5.9 Alarm Output Wiring

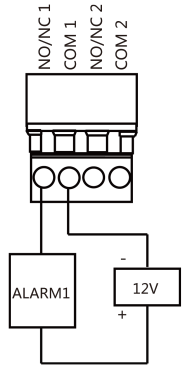

Note

For details about changing the relay output status via the jumper cap, see ***Alarm Relay Output Mode (NO/NC)*** .

Chapter 5 Device Settings

After installation and wiring completed, the turnstile will learn the open and closed position automatically.

After the learning, the turnstile is in the normal mode. You can also set the turnstile to test mode, passing mode and memory mode, pair the keyfob, initialize the hardware, switching between RS-485 communication mode and RS-232 communication mode, and view relay output NO/NC diagram by setting the DIP switch on the access control board.

- Normal Mode: The device will work properly.
- Test Mode: Test mode is the same as the normal mode except that the device cannot report the alarm, the event, or the people counting information to the center.
- Passing Mode: There are 9 passing modes, including controlled bi-direction, controlled entrance and prohibited exit, controlled entrance and free exit, free bi-direction, free entrance and controlled exit, free entrance and prohibited exit, prohibited bi-direction, prohibited entrance and free exit.
- Memory Mode: By default, the memory mode is enabled. When multiple cards are presented and authenticated, it allows multiple persons passing through the lane. When it counts the passing people number is equal to the card presented times, or no person passing through the lane after the last person passing, the barriers will be closed.

Note

You can also set the DIP switch on the access control board to control the entrance and exit controlling type, keyfob pairing, etc. For details about the DIP switch value, see ***Access Control Board Serial Port ID Description*** .

5.1 Pair Keyfob (Optional)

Pair the remote control to the device through DIP switch to open/close the barrier remotely.

Before You Start

Ask our technique supports or sales and purchase the keyfob.

Steps

1. Power off the turnstile.
2. Set the No.4 switch of the DIP 1 Switch on the access control board to the ON side.

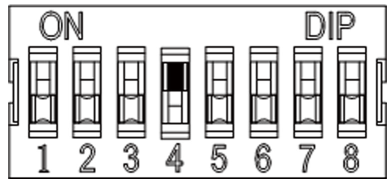

3. Power on the turnstile and it will enter the keyfob pairing mode.
4. Hold the **Close** button for more than 10 seconds.

The keyfob's indicator of the will flash twice if the pairing is completed.

5. Set the No.4 switch to the OFF side, and reboot the turnstile to take effect.

Note

Only one turnstile can pair the keyfob. If multiple turnstiles are in the pairing mode, the keyfob will select only one of them to pair.

5.2 Initialize Device

Steps

1. Set the No.8 switch of the DIP 2 Switch on the access control board to the ON side.

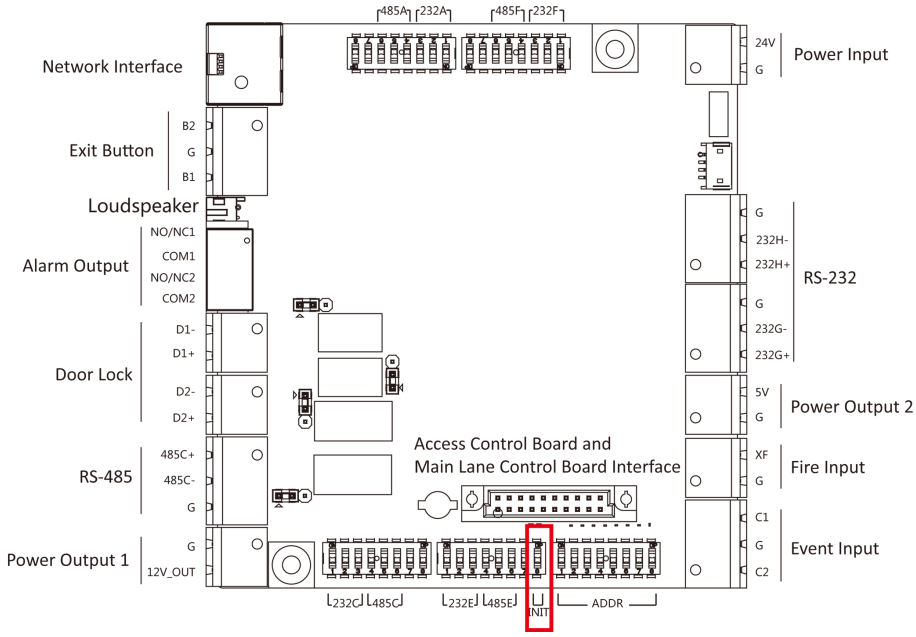

Figure 5-1 Initialization Jumper Cap

2. Disconnect the power and reboot the device. The device buzzer buzzes a long beep.
3. When the beep stopped, set the No.8 switch to the OFF side, and reboot the turnstile to take effect.
4. Disconnect the power and power on the device again.

Caution

The initialization of the device will restore all the parameters to the default setting and all the device events are deleted.

Note

Make sure no persons are in the lane when powering on the device.

5.3 Switch Relay Output Mode (NO/NC)

5.3.1 Barrier Control Relay Output Mode

The jumper cap of the barrier control relay on the access control board is as below:

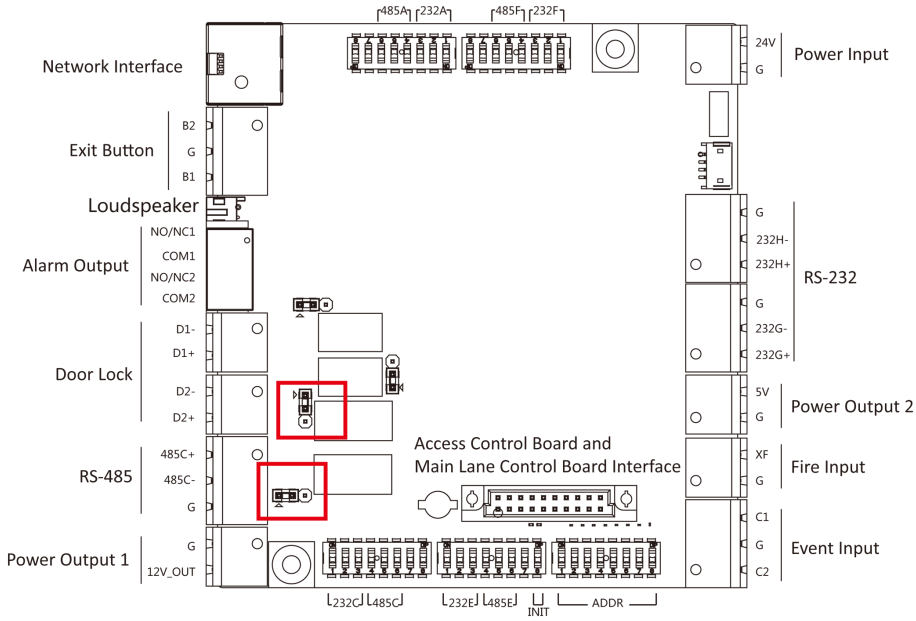

Figure 5-2 Jumper Cap Location (Barrier Control Relay Output Mode)

The jumper cap position of barrier opening (NO) is as below:

Figure 5-3 Barrier Opening (NO)

The jumper cap position of barrier closing (NC) is as below:

Figure 5-4 Barrier Closing (NC)

Note

The default status is NC.

5.3.2 Alarm Relay Output Mode (NO/NC)

The jumper cap of the alarm relay on the access control board is as below:

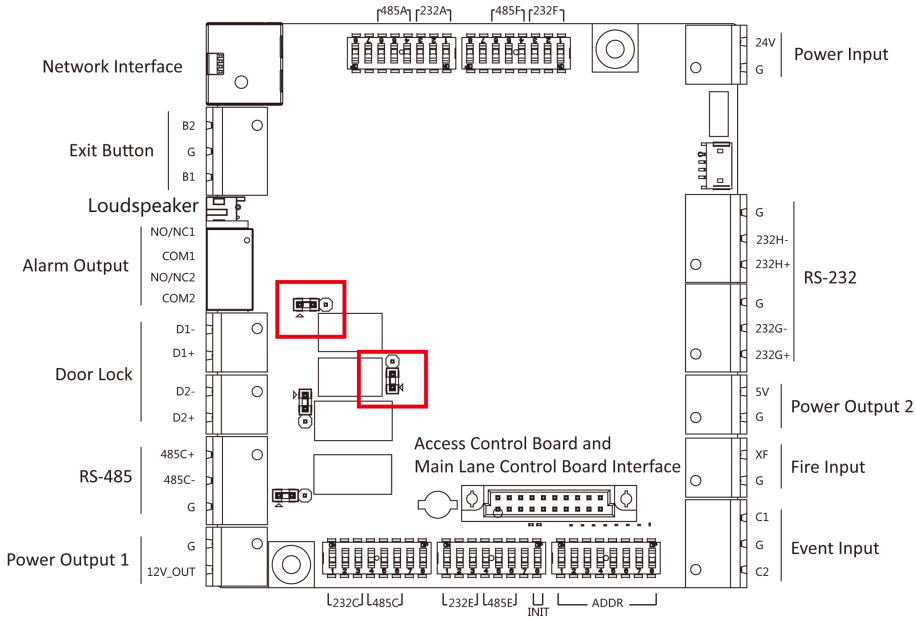

Figure 5-5 Jumper Cap Location (Alarm Relay Output Mode)

The jumper cap position of alarm opening (NO) is as below:

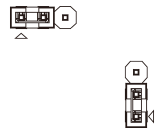

Figure 5-6 Alarm Opening (NO)

The jumper cap position of alarm closing (NC) is as below:

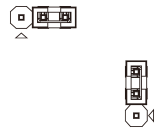

Figure 5-7 Alarm Closing (NC)

Note

The default status is NO.

Chapter 6 Activation

You should activate the device before the first login. After powering on the device, the system will switch to Device Activation page.

Activation via the device, SADP tool and the client software are supported.

The default values of the device are as follows:

- The default IP address: 192.0.0.64
- The default port No.: 8000
- The default user name: admin

6.1 Activate via SADP

SADP is a tool to detect, activate and modify the IP address of the device over the LAN.

Before You Start

- Get the SADP software from the supplied disk or the official website ***http://www.hikvision.com/en/*** , and install the SADP according to the prompts.
- The device and the PC that runs the SADP tool should be within the same subnet.

The following steps show how to activate a device and modify its IP address. For batch activation and IP addresses modification, refer to *User Manual of SADP* for details.

Steps

1. Run the SADP software and search the online devices.
2. Find and select your device in online device list.
3. Input new password (admin password) and confirm the password.

   Caution

   STRONG PASSWORD RECOMMENDED-We highly recommend you create a strong password of your own choosing (using a minimum of 8 characters, including upper case letters, lower case letters, numbers, and special characters) in order to increase the security of your product. And we recommend you reset your password regularly, especially in the high security system, resetting the password monthly or weekly can better protect your product.

4. Click **Activate** to start activation.

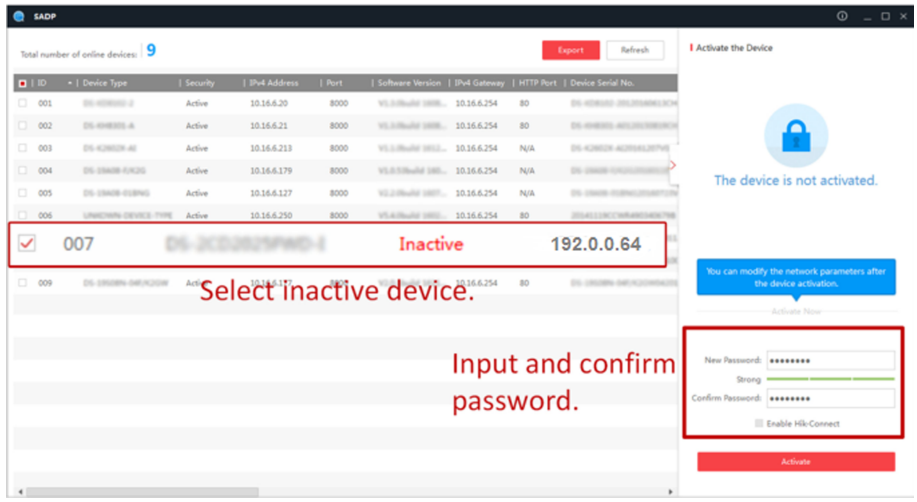

Status of the device becomes **Active** after successful activation.

5. Modify IP address of the device.
   1) Select the device.
   2) Change the device IP address to the same subnet as your computer by either modifying the IP address manually or checking **Enable DHCP**.
   3) Input the admin password and click **Modify** to activate your IP address modification.

6.2 Activate Device via Client Software

For some devices, you are required to create the password to activate them before they can be added to the software and work properly.

Steps

Note

This function should be supported by the device.

1. Enter the Device Management page.
2. Click on the right of **Device Management** and select **Device**.
3. Click **Online Device** to show the online device area.

   The searched online devices are displayed in the list.
4. Check the device status (shown on **Security Level** column) and select an inactive device.
5. Click **Activate** to open the Activation dialog.
6. Create a password in the password field, and confirm the password.

   Caution

   The password strength of the device can be automatically checked. We highly recommend you change the password of your own choosing (using a minimum of 8 characters, including at least

three kinds of following categories: upper case letters, lower case letters, numbers, and special characters) in order to increase the security of your product. And we recommend you change your password regularly, especially in the high security system, changing the password monthly or weekly can better protect your product.
Proper configuration of all passwords and other security settings is the responsibility of the installer and/or end-user.

7. Click **OK** to activate the device.

Appendix A. DIP Switch Description

The DIP switch is on the main lane control board. The left side to the right side is from the low bit to the high bit.

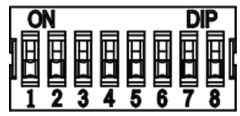

When the switch is towards ON, it means the switch is enabled, otherwise, the switch is off. If you set the DIP switch like the figure displayed below, its binary value is 00001100, and its decimal value is 12.

Appendix B. Event and Alarm Type

Event	Alarm Type
Tailgating	Visual and Audible
Reverse Passing	Visual and Audible
Force Accessing	None
Climb over Barrier	Visual and Audible
Overstay	Visual and Audible
Passing Timeout	None
Intrusion	Visual and Audible
Free Passing Authentication Failed	Visual
Barrier Obstructed	None

Appendix C. Table of Audio Index Related Content

Index	Content
1	Authenticated.
2	Card No. does not exist.
3	Card No. and fingerprint mismatch.
4	Climbing over the barrier.
5	Reverse passing.
6	Passing timeout.
7	Intrusion.
8	Force accessing.
9	Tailgating.
10	No permissions.
11	Authentication time out.
12	Authentication failed.
13	Expired card.
14	Stay out of time.

Appendix D. Error Code Description

The swing barrier will display the error code on the seven-segment display if error occurred. Refer to the table below to find the description of each number.

Error Reason	Code	Error Reason	Code
Normal Working	00	Upper IR Board 5 Offline	29
The First IR Beam on Upper IR Board Triggered	01	Upper IR Board 6 Offline	30
The Second IR Beam on Upper IR Board Triggered	02	Upper IR Board 7 Offline	31
The Third IR Beam on Upper IR Board Triggered	03	Upper IR Board 8 Offline	32
The Fourth IR Beam on Upper IR Board Triggered	04	Upper IR Board 9 Offline	33
The Fifth IR Beam on Upper IR Board Triggered	05	Upper IR Board 10 Offline	34
The Sixth IR Beam on Upper IR Board Triggered	06	Upper IR Board 11 Offline	35
The Seventh IR Beam on Upper IR Board Triggered	07	Upper IR Board 12 Offline	36
The Eighth IR Beam on Upper IR Board Triggered	08	Lower IR Board 1 Offline	37
The Ninth IR Beam on Upper IR Board Triggered	09	Lower IR Board 2 Offline	38
The Tenth IR Beam on Upper IR Board Triggered	10	Lower IR Board 3 Offline	39
The Eleventh IR Beam on Upper IR Board Triggered	11	Lower IR Board 4 Offline	40
The Twelfth IR Beam on Upper IR Board Triggered	12	Lower IR Board 5 Offline	41
The First IR Beam on Lower IR Board Triggered	13	Lower IR Board 6 Offline	42
The Second IR Beam on Lower IR Board Triggered	14	Lower IR Board 7 Offline	43

Error Reason	Code	Error Reason	Code
The Third IR Beam on Lower IR Board Triggered	15	Lower IR Board 8 Offline	44
The Fourth IR Beam on Lower IR Board Triggered	16	Lower IR Board 9 Offline	45
The Fifth IR Beam on Lower IR Board Triggered	17	Lower IR Board 10 Offline	46
The Sixth IR Beam on Lower IR Board Triggered	18	Lower IR Board 11 Offline	47
The Seventh IR Beam on Lower IR Board Triggered	19	Lower IR Board 12 Offline	48
The Eighth IR Beam on Lower IR Board Triggered	20	Light Board Offline (Entrance)	49
The Ninth IR Beam on Lower IR Board Triggered	21	Light Board Offline (Exit)	50
The Tenth IR Beam on Lower IR Board Triggered	22	IR Adapter Offline (Up)	51
The Eleventh IR Beam on Lower IR Board Triggered	23	IR Adapter Offline (Low)	52
The Twelfth IR Beam on Lower IR Board Triggered	24	CAN Bus Exception	53
Upper IR Board 1 Offline	25	Not Studying	54
Upper IR Board 2 Offline	26	Obstruction	55
Upper IR Board 3 Offline	27	Exceeding Studying Range	56
Upper IR Board 4 Offline	28	Motor Exception	57

Appendix E. Communication Matrix and Device Command

Communication Matrix

Scan the following QR code to get the device communication matrix.
Note that the matrix contains all communication ports of Hikvision access control and video intercom devices.

Figure E-1 QR Code of Communication Matrix

Device Command

Scan the following QR code to get the device common serial port commands.
Note that the command list contains all commonly used serial ports commands for all Hikvision access control and video intercom devices.

Figure E-2 Device Command

See Far, Go Further

UD21908B